GRS25

ECHANGEUR THERMIQUE AIR/HUILE
HEAT EXCHANGER - AIR/OIL

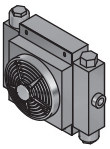

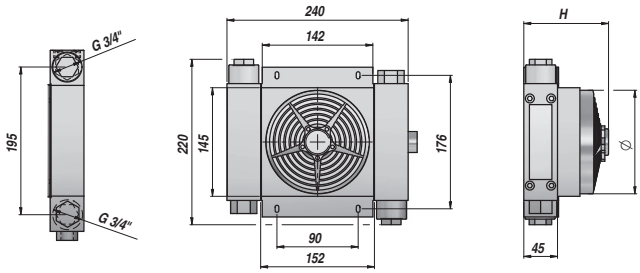

Code *Code*	Type *Type*	Type de moteur *Setting*	Q l/min	H mm	Ventilateur - *Fan* Ø		Masse radiant *Radiator mass*	Absorption *Consumption*	kg
AS0189380011	GRS25-12 A	V12DC	10/80	160	167	Aspirant *Sucking*	0.99 dm3	5.2 A	4.00
AS0189380021	GRS25-24 A	V24DC	10/80	160	167			2.8 A	4,00
AS0189380031	GRS25-230 A	V230/50-60Hz	10/80	155	170			0.23 A	4,00
AS0189380041	GRS25-400 A	V230/400/50-60Hz	10/80	155	170			0.9 A	4,00
AS0189380051	GRS25-Hyd. A	for GR.1 gear motor *	10/80	165	170			0.6 kW	4,00

* Moteur à engrenages GR.1 fourni sur demande - *Gr.1 gear motor supplied on request*

GRS50

ECHANGEUR THERMIQUE AIR/HUILE
HEAT EXCHANGER - AIR/OIL

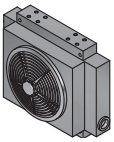

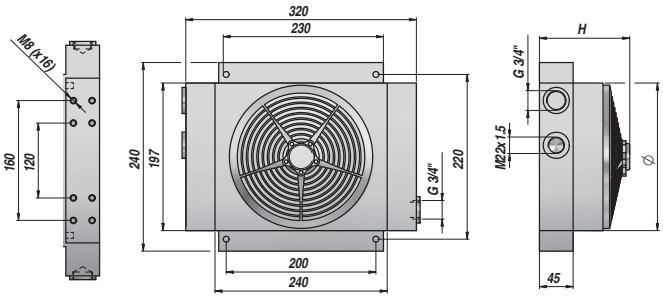

Code *Code*	Type *Type*	Type de moteur *Setting*	Q l/min	H mm	Ventilateur - *Fan* Ø		Masse radiant *Radiator mass*	Absorption *Consumption*	kg
AS0100610011	GRS50-12 A	V12DC	10/80	140	190	Aspirant *Sucking*	2.13 dm3	8.0 A	5,00
AS0100610021	GRS50-24 A	V24DC	10/80	140	190			4.3 A	5,00
AS0100610031	GRS50-230 A	V230/50-60Hz	10/80	135	200			0.34 A	5,00
AS0100610041	GRS50-400 A	V230/400/50-60Hz	10/80	135	200			0.13 A	5.00
AS0100610051	GRS50-Hyd. A	for GR.1 gear motor *	10/80	145	195			0.7 kW	5,00

* Moteur à engrenages GR.1 fourni sur demande - *Gr.1 gear motor supplied on request*

Disponibilités & Tarifs en ligne sur **www.unidro-contarini.com/fr/disponibilites-tarifs**
*Availability & Rates online on **www.unidro-contarini.com/fr/disponibilites-tarifs/***

La société peut apporter toute modification au produit sans avis préalable.
The company reserves the right to modify the product at any time without prior notice.

GRS 25

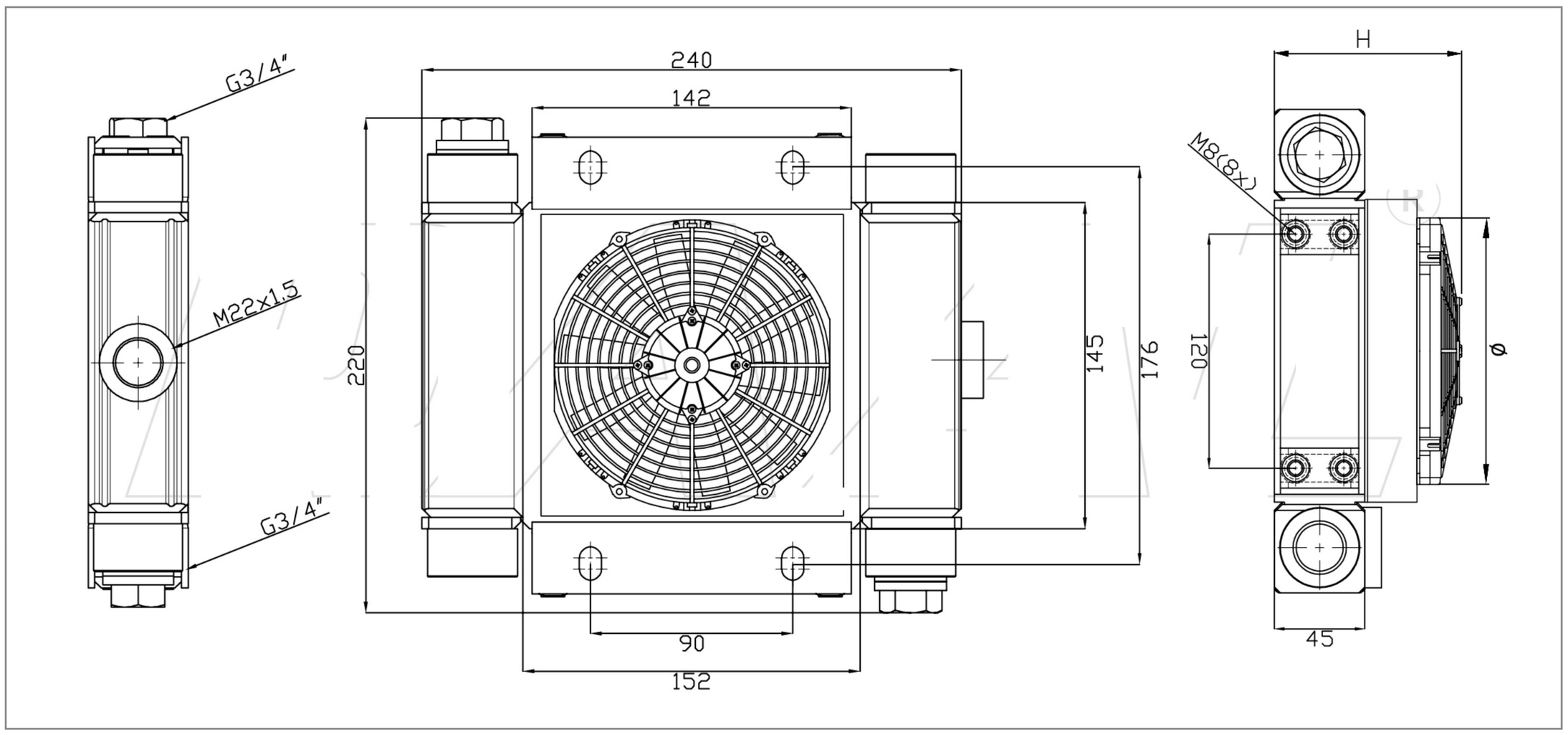

Gamma Oil Coolers

Product Code	Type of Setting	Overall H	Fan diameter	Fan Power m3/h	M.R. dm3	Power Consumpt.
RU0189380000	UNCOVERED	45	-	-	0,99	-
RU0189380011	12V Suct.	165	167	395	0,99	6,0 A
RU0189380012	12V Blow.	165	167	408	0,99	6,1 A
RU0189380021	24V Suct.	165	167	295	0,99	2,6 A
RU0189380022	24V Blow.	165	167	423	0,99	3,3 A
RU0189380031	230V-50/60Hz Suct.	155	170	565	0,99	0,23 A
RU0189380032	230V-50/60Hz Blow.	155	170	565	0,99	0,23 A
RU0189380041	230/400V-50/60Hz 3FN Suct.	155	170	535	0,99	0,9 A
RU0189380042	230/400V-50/60Hz 3FN Blow.	155	170	535	0,99	0,9 A
RU0189380051	Pred. Hydraulic. Suct. (Supp. G1)	205	195	880	0,99	0,6 kW
RU0189380052	Pred. Hydraulic. Blow. (Supp. G1)	205	195	880	0,99	0,6 kW

Technical Specification

Minimum Range	Kw 1,4 : 10 lt
Maximum Range	Kw 3 : 80 lt

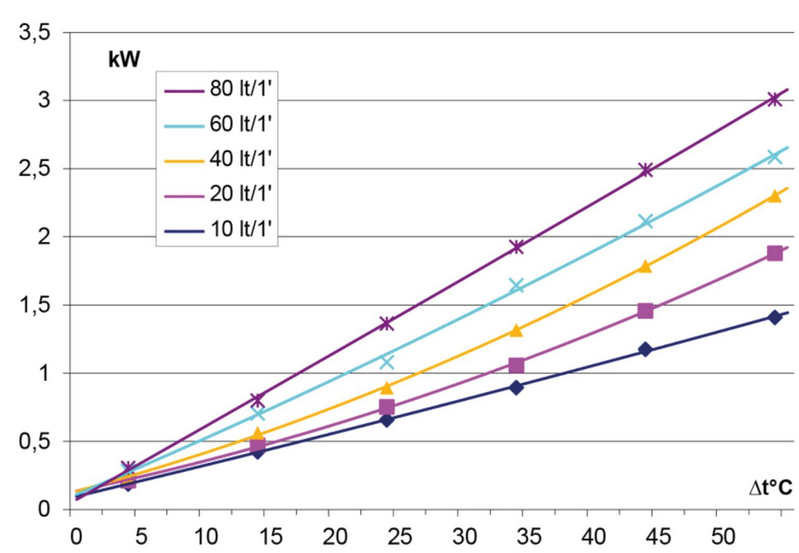

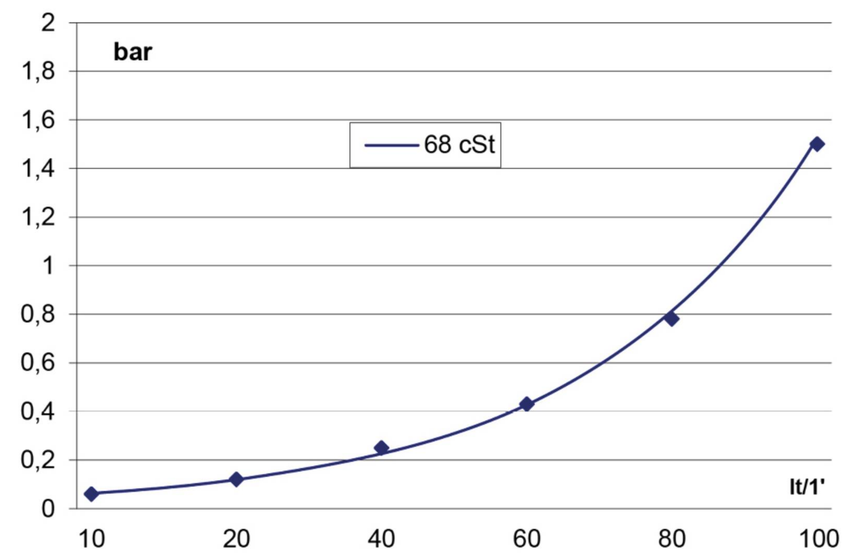

The overall dimensions and the technical characteristics are to be considered indicative, dealing with standarf products in constant evolution.

GRS 50

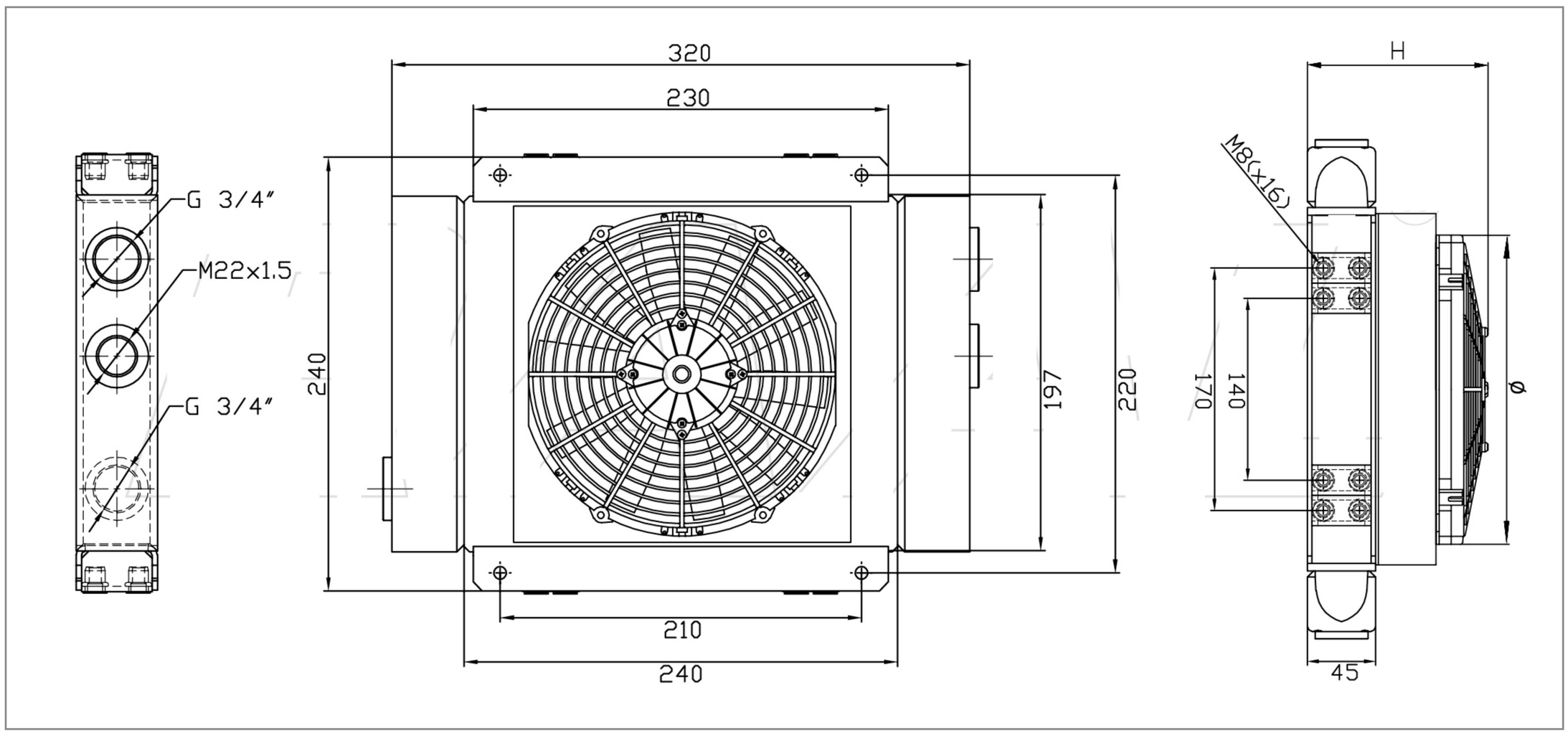

Gamma Oil Coolers

Product Code	Type of Setting	Overall H	Fan diameter	Fan Power m3/h	M.R. dm3	Power Consumpt.
RU0100610000	UNCOVERED	45	-	-	2,13	-
RU0100610011	12V Suct.	140	190	446	2,13	6,4 A
RU0100610012	12V Blow.	140	190	497	2,13	6,4 A
RU0100610021	24V Suct.	140	190	419	2,13	2,8 A
RU0100610022	24V Blow.	140	190	505	2,13	3,3 A
RU0100610031 [*]	230V-50/60Hz Suct.	135	200	1025	2,13	0,34 A
RU0100610032 [*]	230V-50/60Hz Blow.	135	200	1025	2,13	0,34 A
RU0100610041	230/400V-50/60Hz 3FN Suct.	135	200	1020	2,13	0,13 A
RU0100610042	230/400V-50/60Hz 3FN Blow.	135	200	1020	2,13	0,13 A
RU0100610051	Pred. Hydraulic. Suct. (Supp. G1)	185	195	958	2,13	0,7 kW
RU0100610052	Pred. Hydraulic. Blow. (Supp. G1)	185	195	958	2,13	0,7 kW

[*] In SINGLE PHASE models (*31/*32), ADJUSTABLE THERMOSTAT 0-90° on request.

Technical Specification

Minimum Range	Kw 3 : 10 lt
Maximum Range	Kw 6,3 : 80 lt

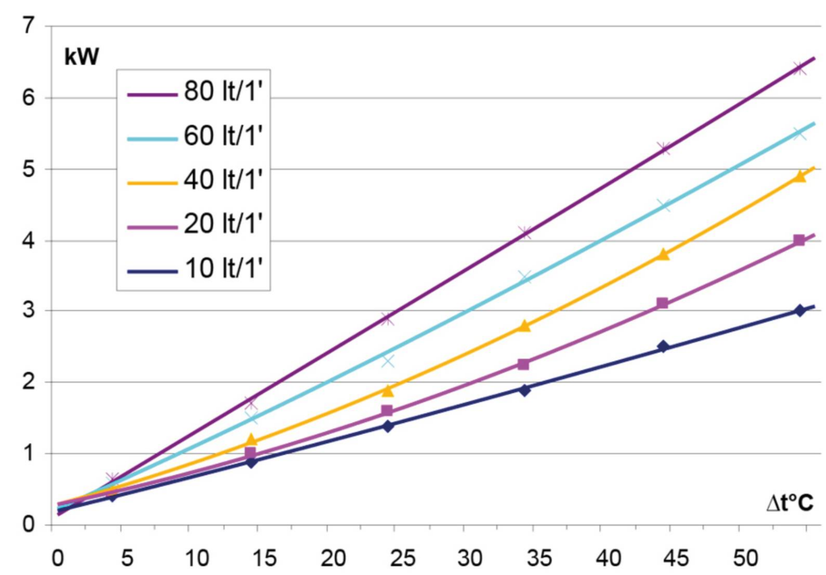

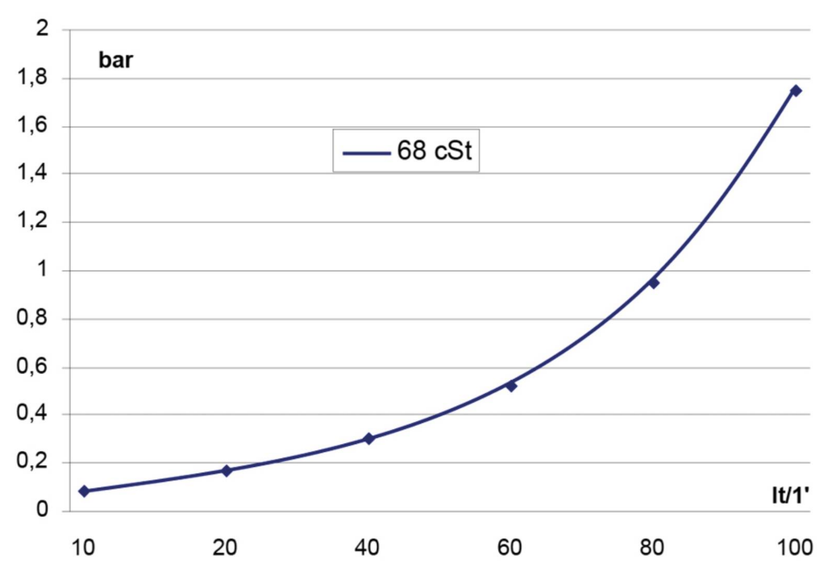

The overall dimensions and the technical characteristics are to be considered indicative, dealing with standarf products in constant evolution.

By-Pass GRS 50

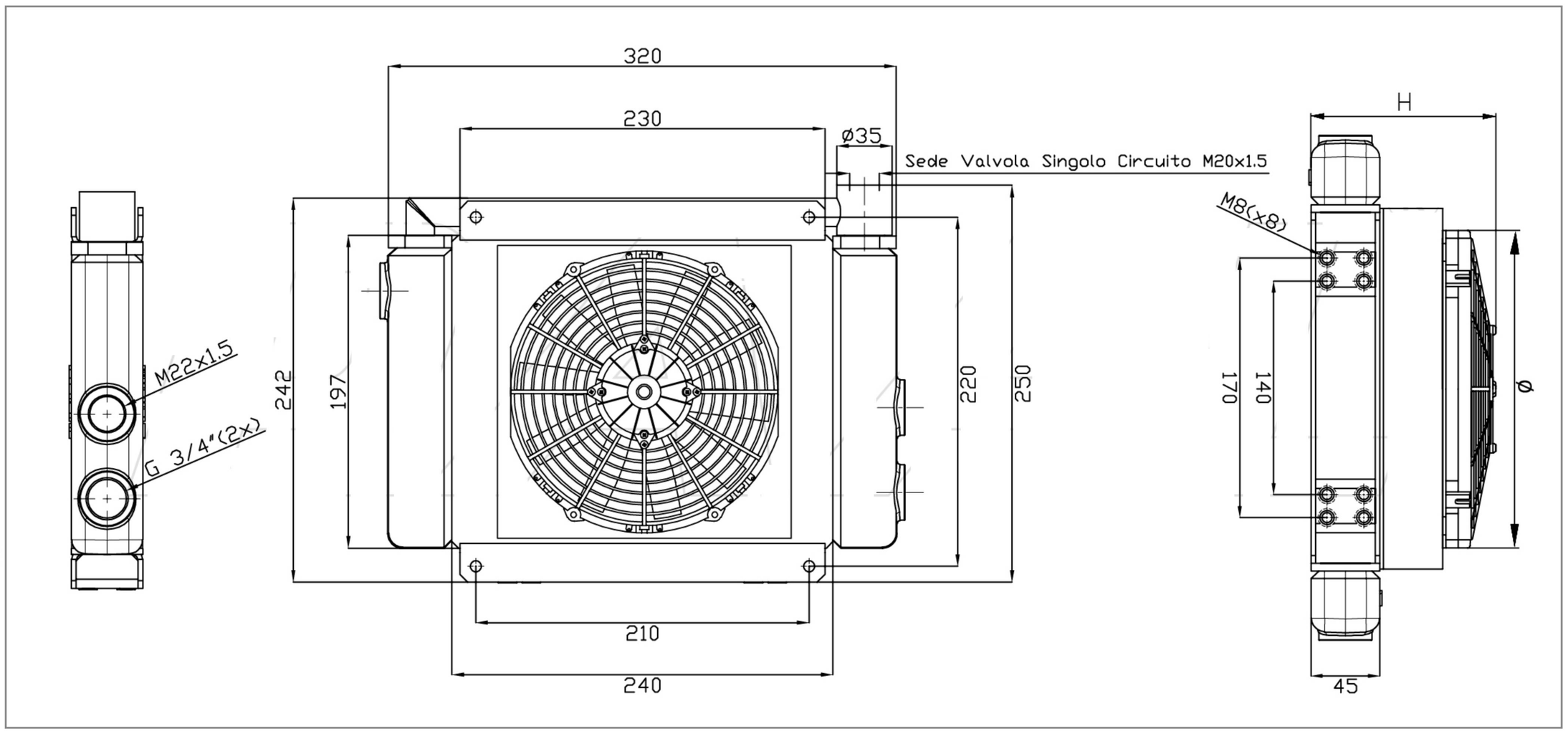

[*] The cooler is delivered only with SINGLE CIRCUIT configuration. The DOUBLE CIRCUIT only at specific request of the customer.

Gamma Oil Coolers

Product Code	Type of Setting	Overall H	Fan diameter	Fan Power m3/h	M.R. dm3	Power Consumpt.
RU020111B000	UNCOVERED	45	-	-	2,13	-
RU020111B011	12V Suct.	140	190	446	2,13	6,4 A
RU020111B012	12V Blow.	140	190	497	2,13	6,4 A
RU020111B021	24V Suct.	140	190	419	2,13	2,8 A
RU020111B022	24V Blow.	140	190	505	2,13	3,3 A
RU020111B031 [*]	230V-50/60Hz Suct.	135	200	1025	2,13	0,34 A
RU020111B032 [*]	230V-50/60Hz Blow.	135	200	1025	2,13	0,34 A
RU020111B041	230/400V-50/60Hz 3FN Suct.	135	200	1020	2,13	0,13 A
RU020111B042	230/400V-50/60Hz 3FN Blow.	135	200	1020	2,13	0,13 A
RU020111B051	Pred. Hydraulic. Suct. (Supp. G2)	185	195	958	2,13	0,7 kW
RU020111B052	Pred. Hydraulic. Blow. (Supp. G2)	185	195	958	2,13	0,7 kW

[*] In SINGLE PHASE models (*31/*32), ADJUSTABLE THERMOSTAT 0-90° on request.

Technical Specification

Minimum Range	Kw 3 : 10 lt
Maximum Range	Kw 6,5 : 80 lt

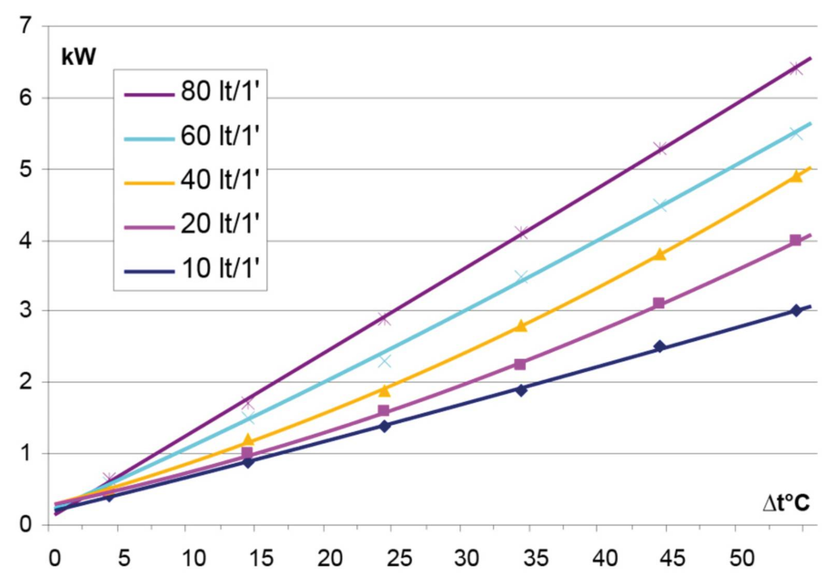

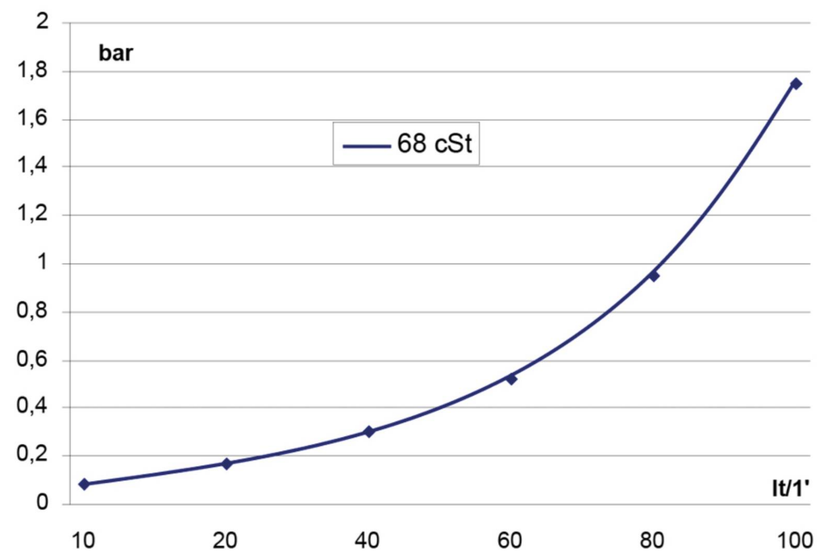

The overall dimensions and the technical characteristics are to be considered indicative, dealing with standarf products in constant evolution.

GRS 80

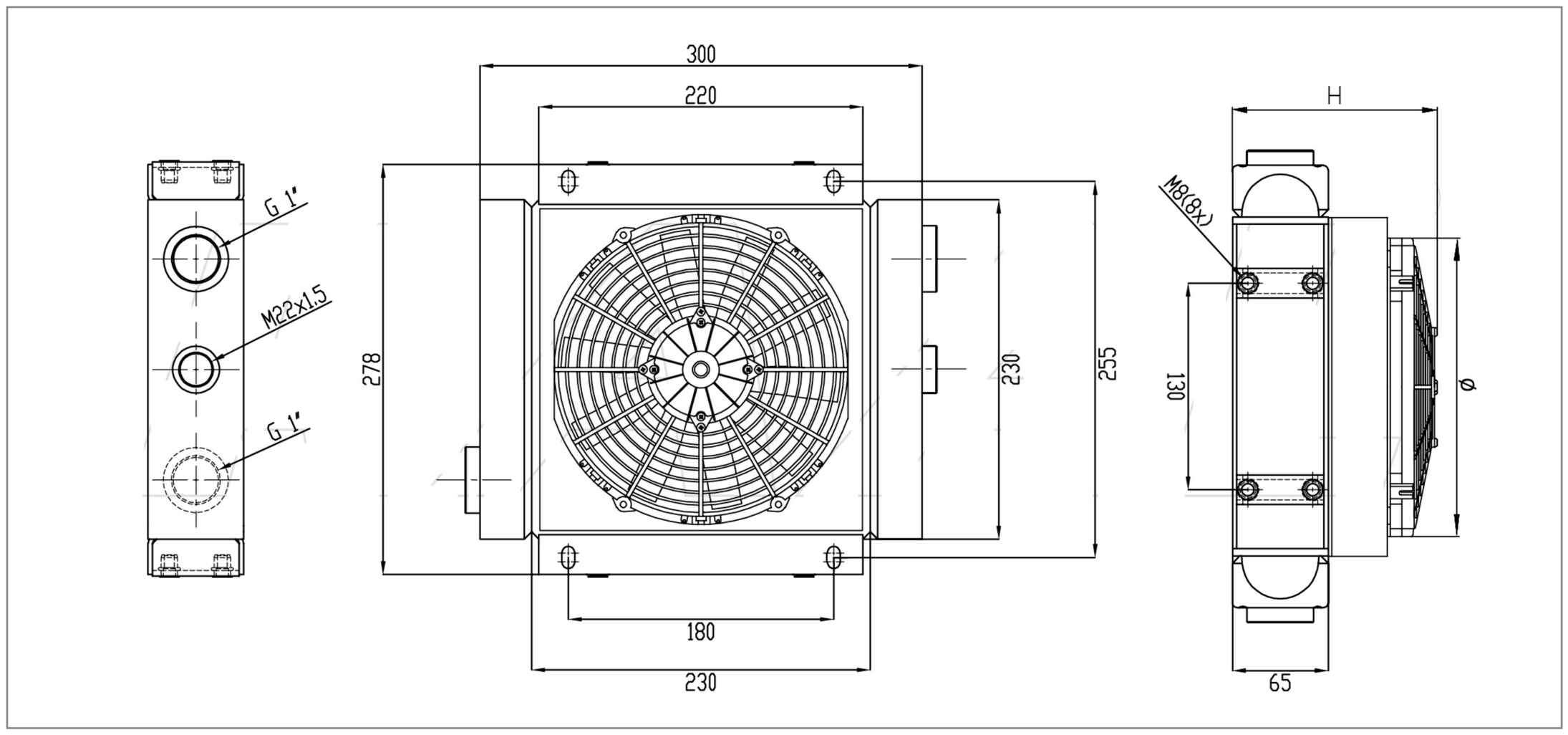

Gamma Oil Coolers

Product Code	Type of Setting	Overall H	Fan diameter	Fan Power m3/h	M.R. dm3	Power Consumpt.
RU0345380000	UNCOVERED	65	-	-	3,43	-
RU0345380011	12V Suct.	170	225	689	3,43	7,2 A
RU0345380012	12V Blow.	170	225	703	3,43	7,4 A
RU0345380021	24V Suct.	170	225	683	3,43	3,6 A
RU0345380022	24V Blow.	170	225	736	3,43	3,7 A
RU0345380031	230V-50/60Hz Suct.	165	200	1025	3,43	0,34 A
RU0345380032	230V-50/60Hz Blow.	165	200	1025	3,43	0,34 A
RU0345380041	230/400V-50/60Hz 3FN Suct.	165	200	1020	3,43	0,13 A
RU0345380042	230/400V-50/60Hz 3FN Blow.	165	200	1020	3,43	0,13 A
RU0345380051	Pred. Hydraulic. Suct. (Supp. G1)	215	200	958	3,43	0,7 kW
RU0345380052	Pred. Hydraulic. Blow. (Supp. G1)	215	200	958	3,43	0,7 kW

Technical Specification

Minimum Range	Kw 6 : 16 lt
Maximum Range	Kw 16 : 100 lt

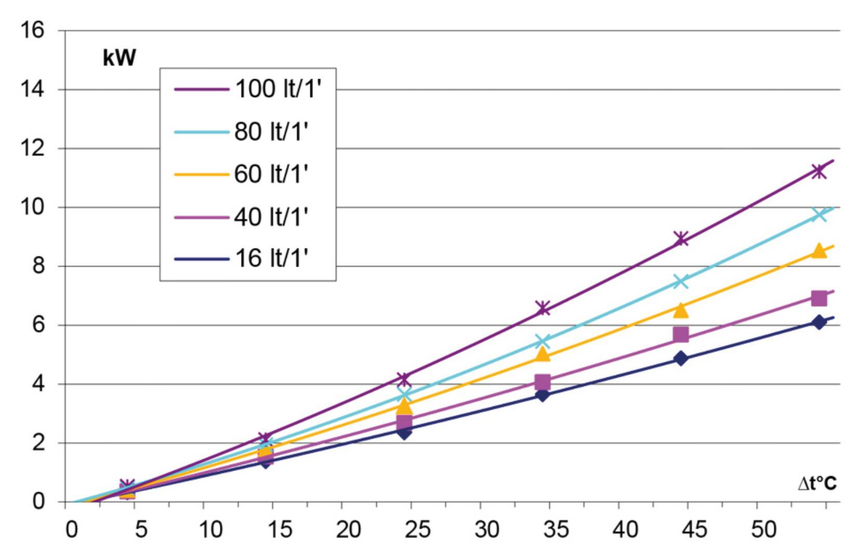

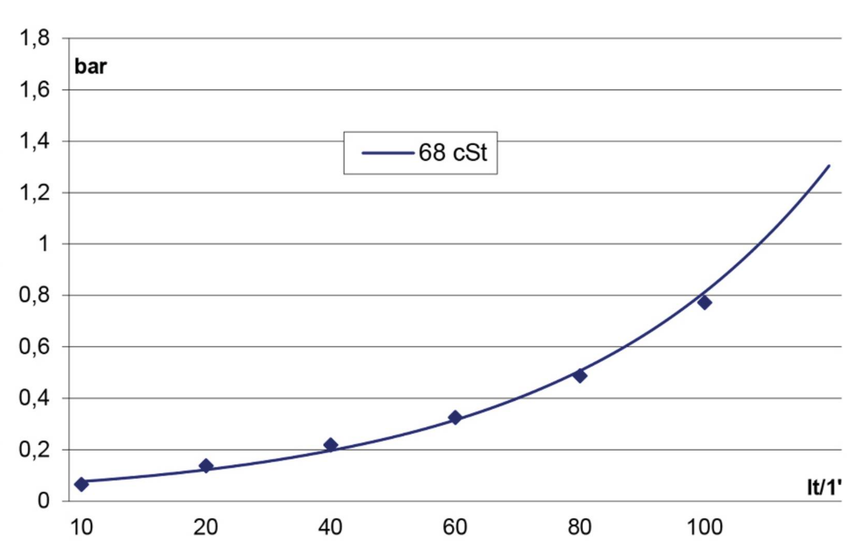

The overall dimensions and the technical characteristics are to be considered indicative, dealing with standarf products in constant evolution.

ECHANGEUR THERMIQUE AIR/HUILE
HEAT EXCHANGER - AIR/OIL
GRS100

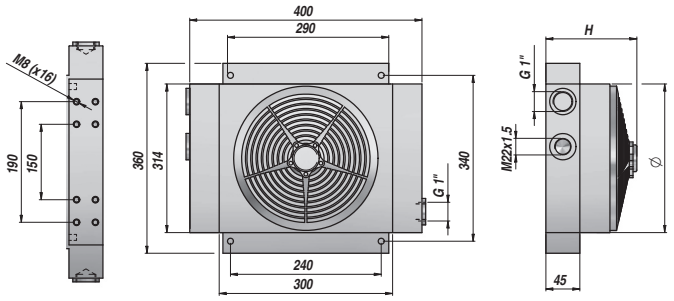

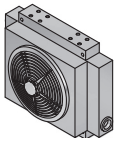

Code *Code*	Type *Type*	Type de moteur *Setting*	Q l/min	H mm	Ventilateur - *Fan* Ø		Masse radiant *Radiator mass*	Absorption *Consumption*	kg
AS0100630011	GRS100-12 A	V12DC	20/120	210	305	Aspirant *Sucking*	4.24 dm3	15.0 A	9.00
AS0100630021	GRS100-24 A	V24DC	20/120	210	305			7.8 A	9,00
AS0100630031	GRS100-230 A	V230/50-60Hz	20/120	175	300			1.55 A	9,00
AS0100630041	GRS100-400 A	V230/400/50-60Hz	20/120	175	300			0.48 A	9.00
AS0100630051	GRS100-Hyd. A	for GR.2 gear motor *	20/120	228	300			0.41 kW	9,00

* Moteur à engrenages GR.2 fourni sur demande - *Gr.2 gear motor supplied on request*

ECHANGEUR THERMIQUE AIR/HUILE
HEAT EXCHANGER - AIR/OIL
GRS150

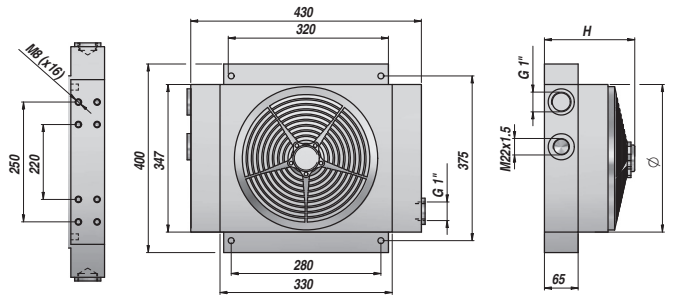

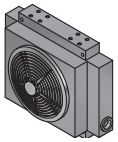

Code *Code*	Type *Type*	Type de moteur *Setting*	Q l/min	H mm	Ventilateur - *Fan* Ø		Masse radiant *Radiator mass*	Absorption *Consumption*	kg
AS0100650011	GRS150-12 A	V12DC	30/140	230	305	Aspirant *Sucking*	7.44 dm3	15.0 A	13.00
AS0100650021	GRS150-24 A	V24DC	30/140	230	305			7.8 A	13,00
AS0100650031	GRS150-230 A	V230/50-60Hz	30/140	195	300			1.55 A	13,00
AS0100650041	GRS150-400 A	V230/400/50-60Hz	30/140	195	300			0.48 A	13.00
AS0100650051	GRS150-Hyd. A	for GR.2 gear motor *	30/140	245	300			0.41 kW	13,00

* Moteur à engrenages GR.2 fourni sur demande - *Gr.2 gear motor supplied on request*

THERMOSTAT
THERMOSTAT
ATER

Code *Code*	Température *Temperature*	Filetage *Thread*	kg
ATERODIN4050	40/50 °C	M22x1.5	0,20
ATERODIN5060	50/60 °C	M22x1.5	0,20
ATERODIN6070	60/70 °C	M22x1.5	0,20
ATERODIN7080	70/80 °C	M22x1.5	0,20

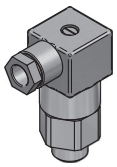

PATTES DE FIXATION (PAIRE)
MOUNTING BRACKETS (PAIR)
ASTU

Code *Code*	Pcs *Pcs*	kg
ASTU00002000	2	1,00

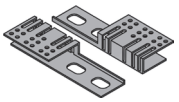

GRS 100

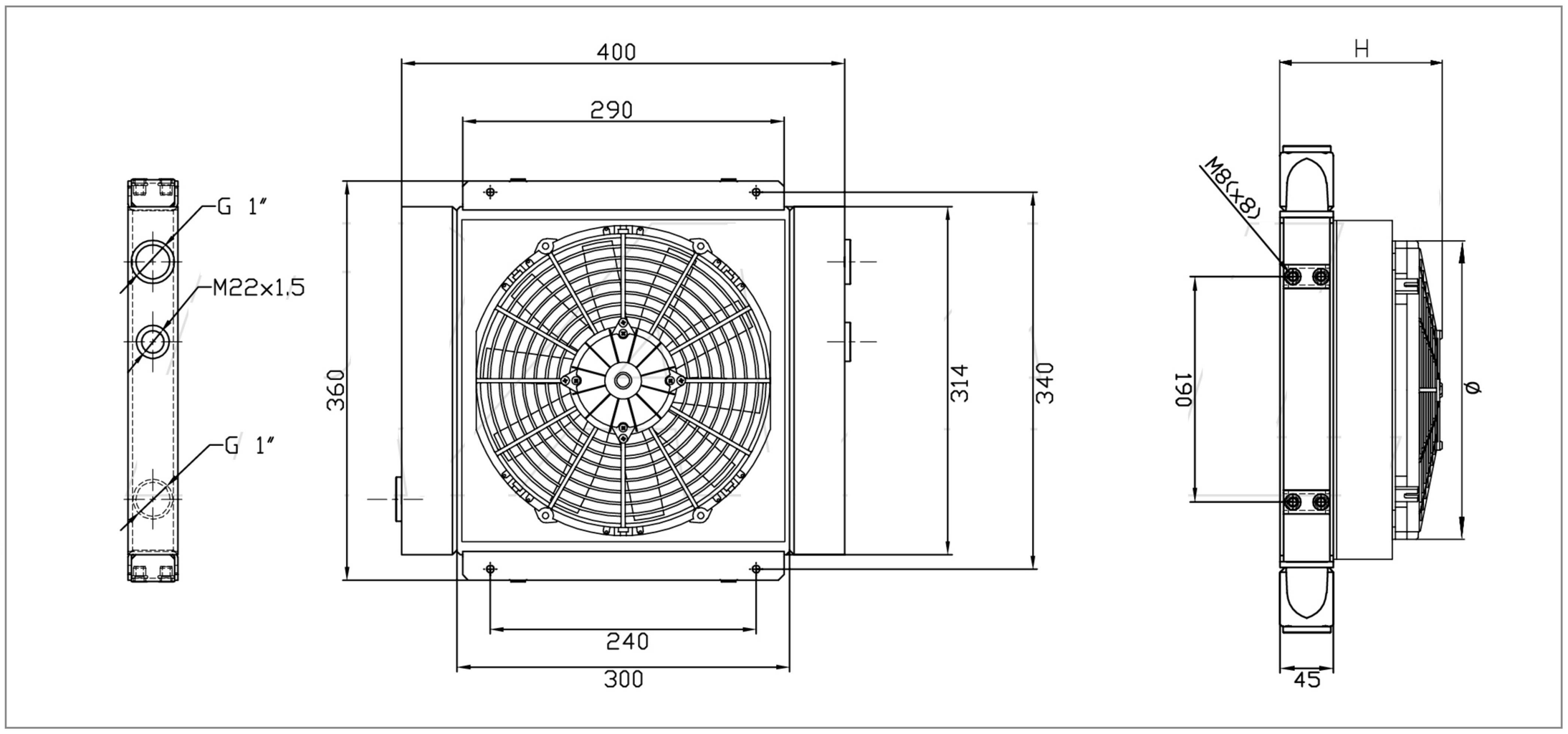

Gamma Oil Coolers

Product Code	Type of Setting	Overall H	Fan diameter	Fan Power m3/h	M.R. dm3	Power Consumpt.
RU0100630000	UNCOVERED	45	-	-	4,24	-
RU0100630011	12V Suct.	210	305	1839	4,24	16,5 A
RU0100630012	12V Blow.	210	305	1736	4,24	14,9 A
RU0100630021	24V Suct.	210	305	2161	4,24	10,3 A
RU0100630022	24V Blow.	210	305	2050	4,24	9,1 A
RU0100630031 [*]	230V-50/60Hz Suct.	175	300	3745	4,24	1,55 A
RU0100630032 [*]	230V-50/60Hz Blow.	175	300	3745	4,24	1,55 A
RU0100630041	230/400V-50/60Hz 3FN Suct.	175	300	3350	4,24	0,48 A
RU0100630042	230/400V-50/60Hz 3FN Blow.	175	300	3350	4,24	0,48 A
RU0100630051	Pred. Hydraulic. Suct. (Supp. G2)	225	300	3080	4,24	0,41 kW
RU0100630052	Pred. Hydraulic. Blow. (Supp. G2)	225	300	3080	4,24	0,41 kW

[*] In SINGLE PHASE models (*31/*32), ADJUSTABLE THERMOSTAT 0-90° on request.

Technical Specification

Minimum Range	Kw 7 : 20 lt
Maximum Range	Kw 13 : 120 lt

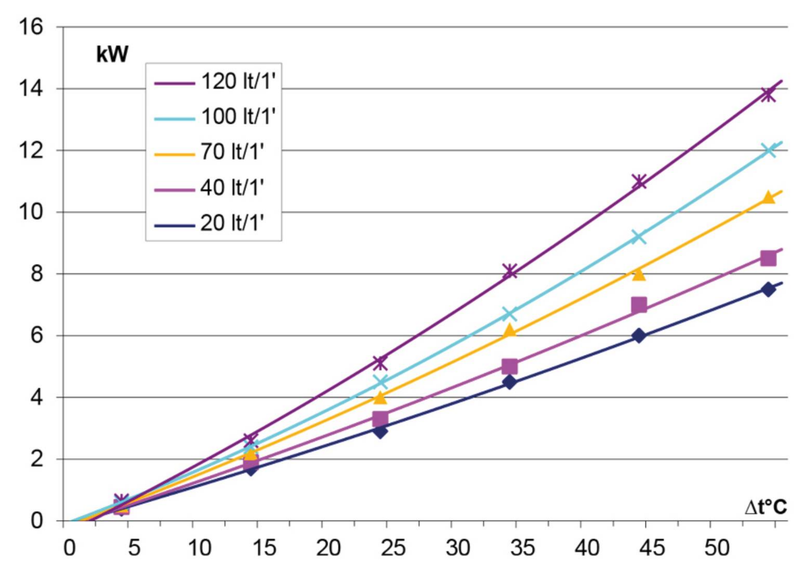

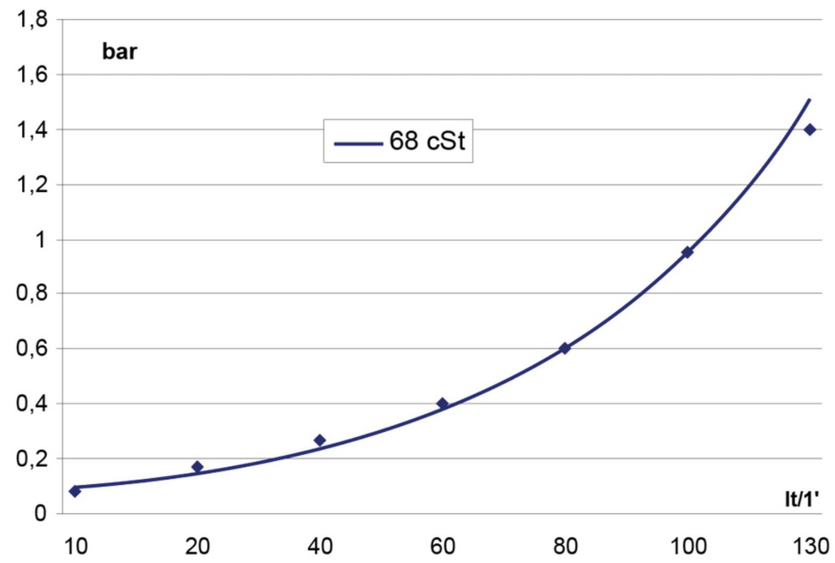

The overall dimensions and the technical characteristics are to be considered indicative, dealing with standarf products in constant evolution.

By-Pass GRS/D 100

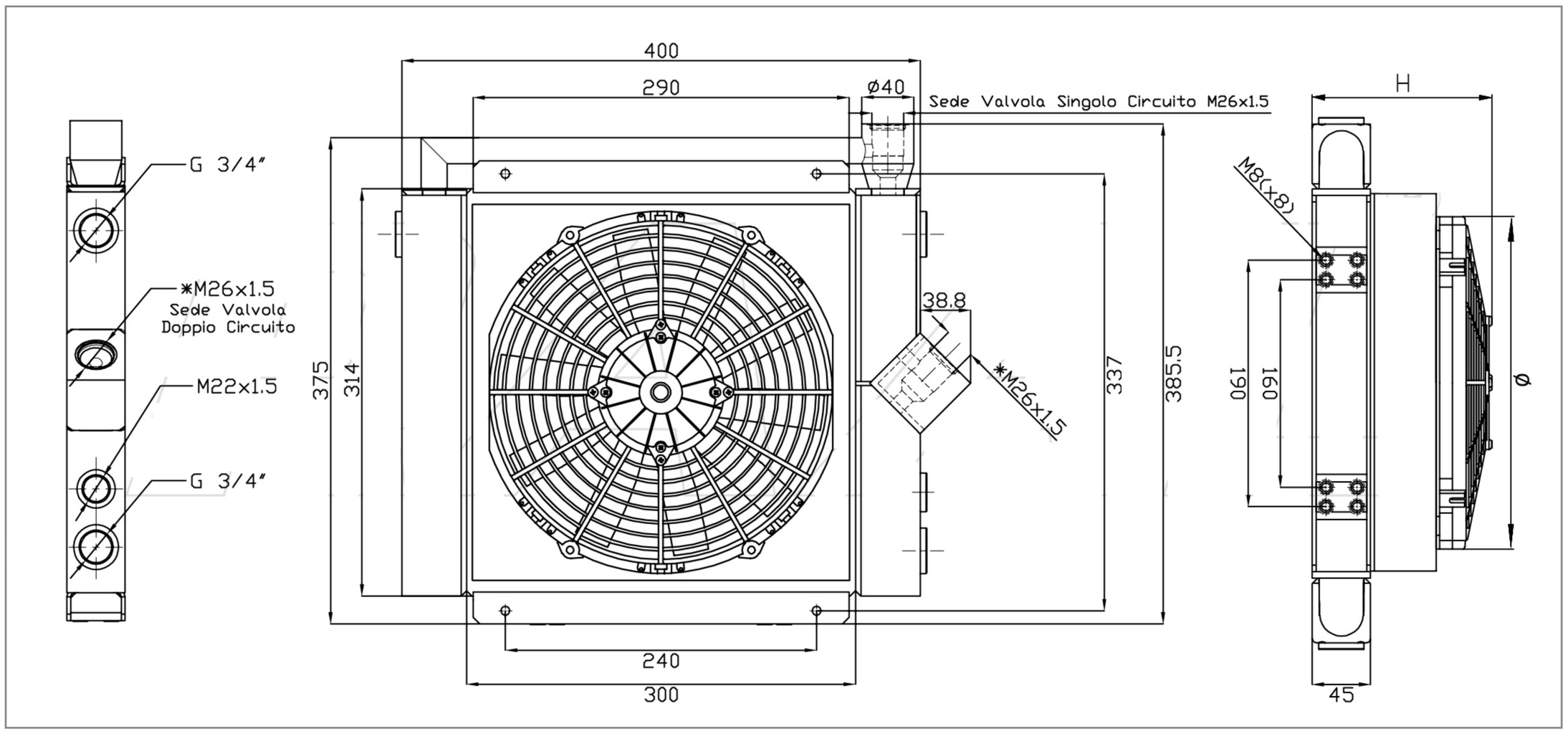

[*] SINGLE CIRCUIT version: the cooler is delivered only with SINGLE CIRCUIT configuration. The DOUBLE CIRCUIT only at specific request of the customer.

Gamma Oil Coolers

Product Code		Type of Setting	Overall H	Fan diameter	Fan Power m3/h	M.R. dm3	Power Consumpt.
RU020112B000		UNCOVERED	45	-	-	4,24	-
RU020112B011		12V Suct.	210	305	1839	4,24	16,5 A
RU020112B012		12V Blow.	210	305	1736	4,24	14,9 A
RU020112B021		24V Suct.	210	305	2161	4,24	10,3 A
RU020112B022		24V Blow.	210	305	2050	4,24	9,1 A
RU020112B031	[*]	230V-50/60Hz Suct.	175	300	3745	4,24	1,55 A
RU020112B032	[*]	230V-50/60Hz Blow.	175	300	3745	4,24	1,55 A
RU020112B041		230/400V-50/60Hz 3FN Suct.	175	300	3350	4,24	0,48 A
RU020112B042		230/400V-50/60Hz 3FN Blow.	175	300	3350	4,24	0,48 A
RU020112B051		Pred. Hydraulic. Suct. (Supp. G2)	225	300	3080	4,24	0,41 kW
RU020112B052		Pred. Hydraulic. Blow. (Supp. G2)	225	300	3080	4,24	0,41 kW

[*] In SINGLE PHASE models (*31/*32), ADJUSTABLE THERMOSTAT 0-90° on request.

Technical Specification

Minimum Range	Kw 7,5 : 20 lt
Maximum Range	Kw 14 : 120 lt

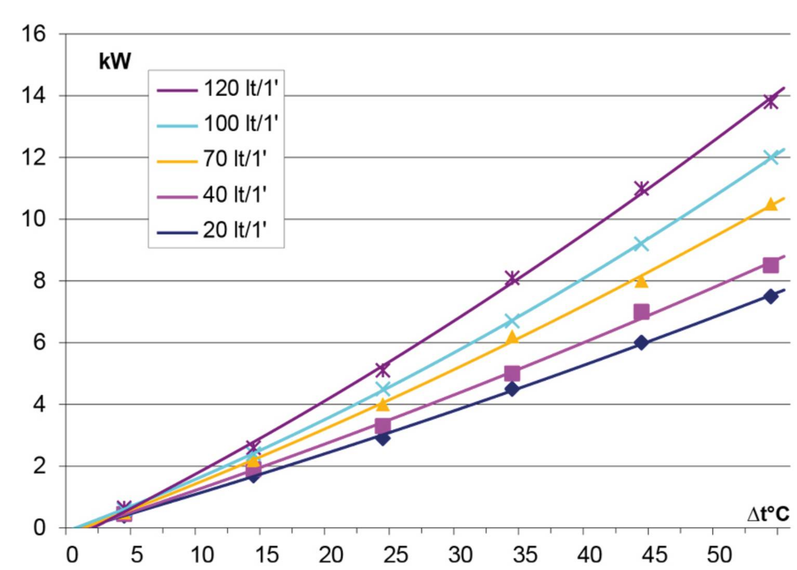

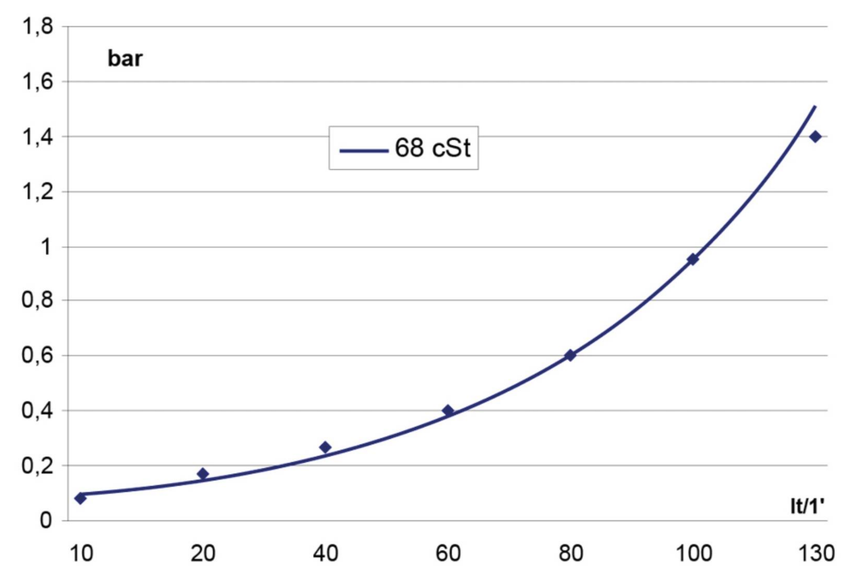

The overall dimensions and the technical characteristics are to be considered indicative, dealing with standarf products in constant evolution.

GRS 120

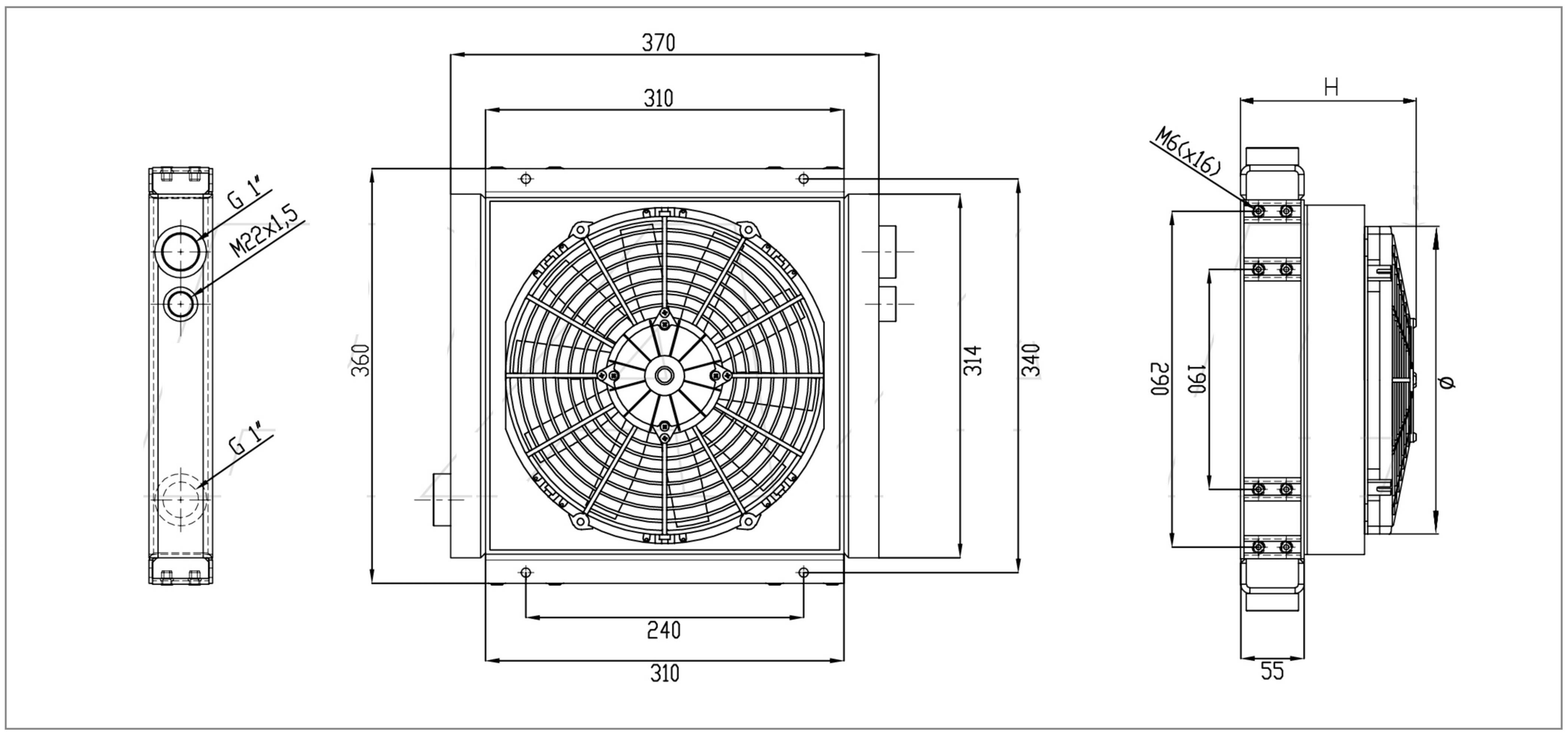

Gamma Oil Coolers

Product Code	Type of Setting	Overall H	Fan diameter	Fan Power m3/h	M.R. dm3	Power Consumpt.
RU0146180000	UNCOVERED	55	-	-	5,35	-
RU0146180011	12V Suct.	210	305	1839	5,35	16,5 A
RU0146180012	12V Blow.	210	305	1736	5,35	14,9 A
RU0146180021	24V Suct.	210	305	2161	5,35	10,3 A
RU0146180022	24V Blow.	210	305	2050	5,35	9,1 A
RU0146180031	230V-50/60Hz Suct.	175	300	3745	5,35	1,55 A
RU0146180032	230V-50/60Hz Blow.	175	300	3745	5,35	1,55 A
RU0146180041	230/400V-50/60Hz 3FN Suct.	175	300	3350	5,35	0,48 A
RU0146180042	230/400V-50/60Hz 3FN Blow.	175	300	3350	5,35	0,48 A
RU0146180051	Pred. Hydraulic. Suct. (Supp. G2)	225	300	3080	5,35	0,41 kW
RU0146180052	Pred. Hydraulic. Blow. (Supp. G2)	225	300	3080	5,35	0,41 kW

Technical Specification

Minimum Range	Kw 9 : 25 lt
Maximum Range	Kw 16 : 130 lt

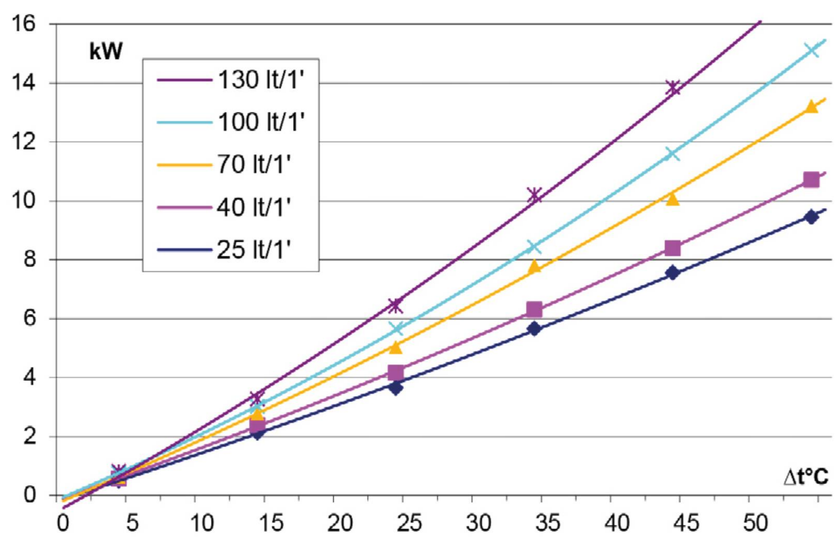

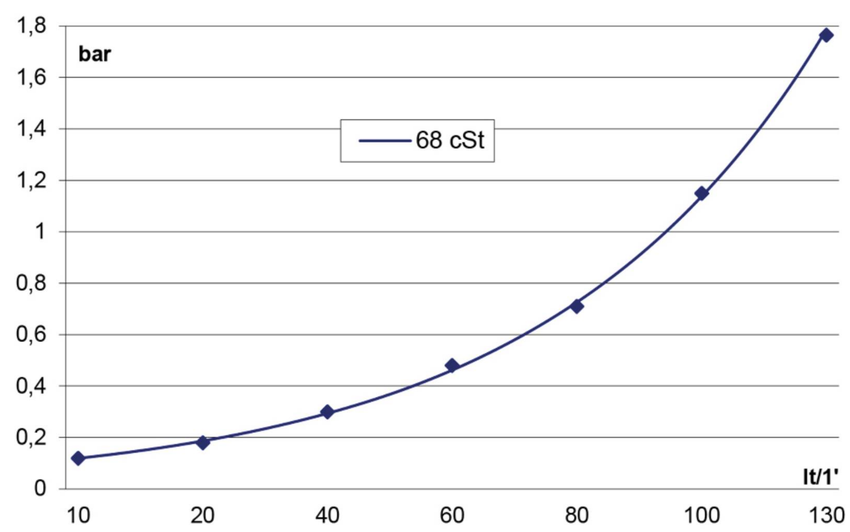

The overall dimensions and the technical characteristics are to be considered indicative, dealing with standarf products in constant evolution.

GRS 130

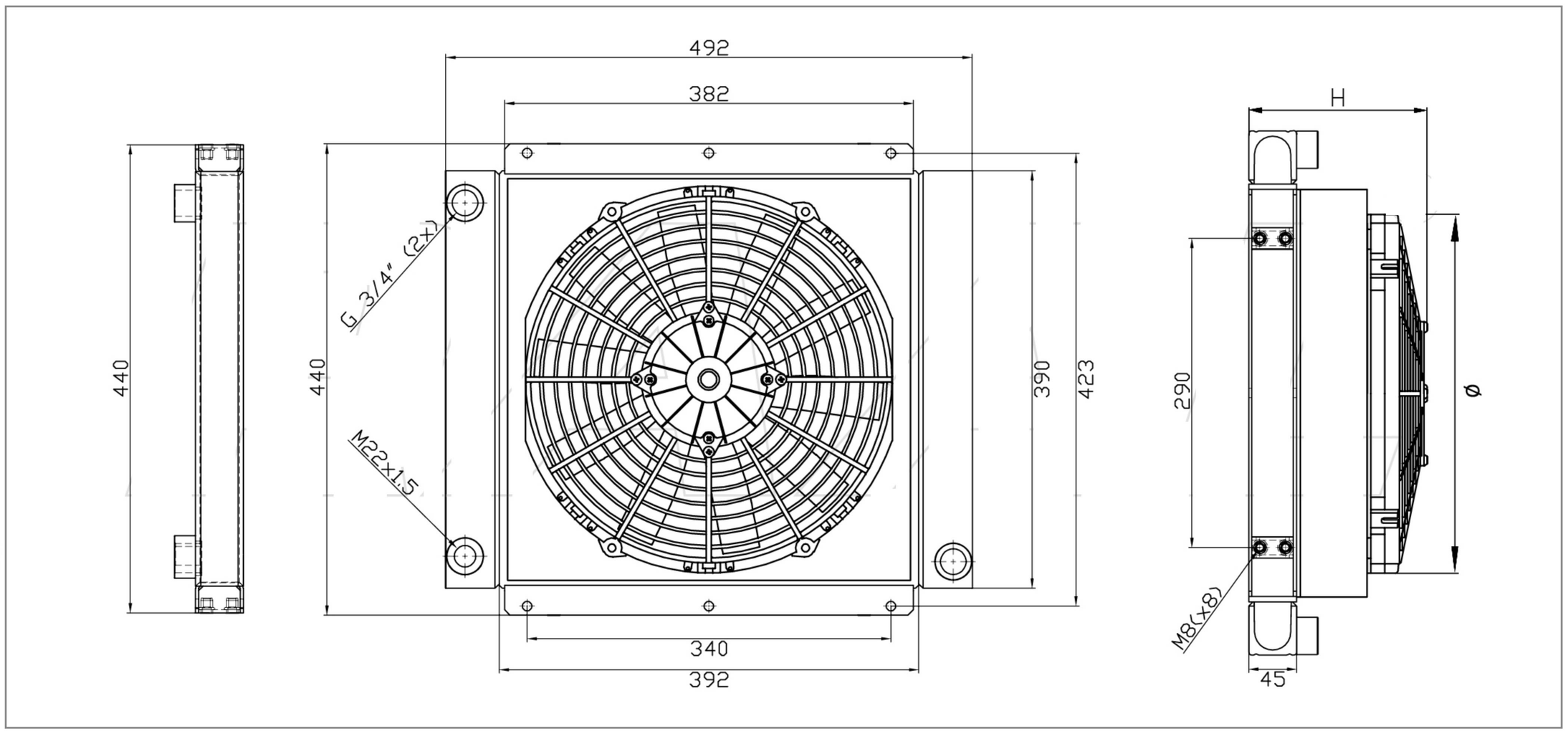

Gamma Oil Coolers

Product Code	Type of Setting	Overall H	Fan diameter	Fan Power m3/h	M.R. dm3	Power Consumpt.
RU0273380000	UNCOVERED	45	-	-	6,90	-
RU0273380011	12V Suct.	210	305	1839	6,90	16,5 A
RU0273380012	12V Blow.	210	305	1736	6,90	14,9 A
RU0273380021	24V Suct.	210	305	2161	6,90	10,3 A
RU0273380022	24V Blow.	210	305	2050	6,90	9,1 A
RU0273380031	230V-50/60Hz Suct.	175	300	3745	6,90	1,55 A
RU0273380032	230V-50/60Hz Blow.	175	300	3745	6,90	1,55 A
RU0273380041	230/400V-50/60Hz 3FN Suct.	175	300	3350	6,90	0,48 A
RU0273380042	230/400V-50/60Hz 3FN Blow.	175	300	3350	6,90	0,48 A
RU0273380051	Pred. Hydraulic. Suct. (Supp. G2)	225	300	3080	6,90	0,41 kW
RU0273380052	Pred. Hydraulic. Blow. (Supp. G2)	225	300	3080	6,90	0,41 kW

Technical Specification

Minimum Range	Kw 8 : 30 lt
Maximum Range	Kw 22 : 140 lt

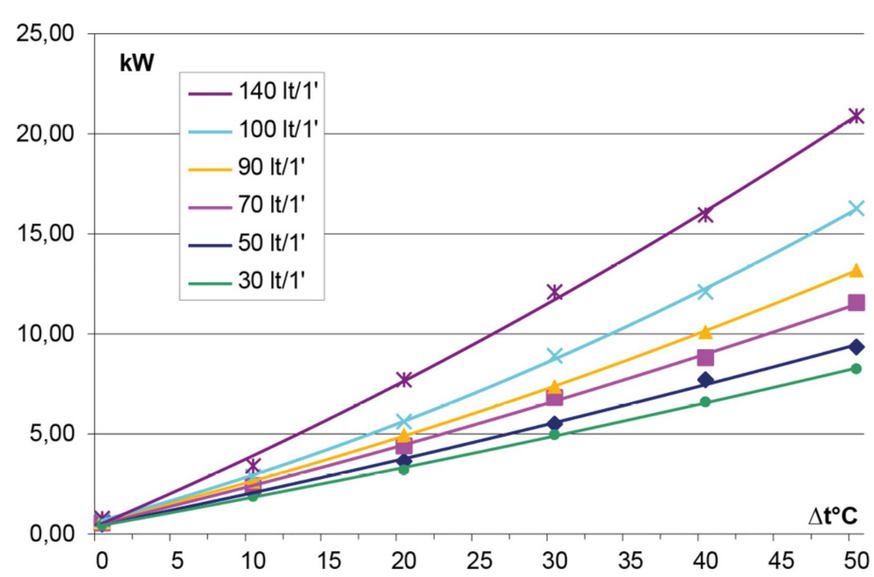

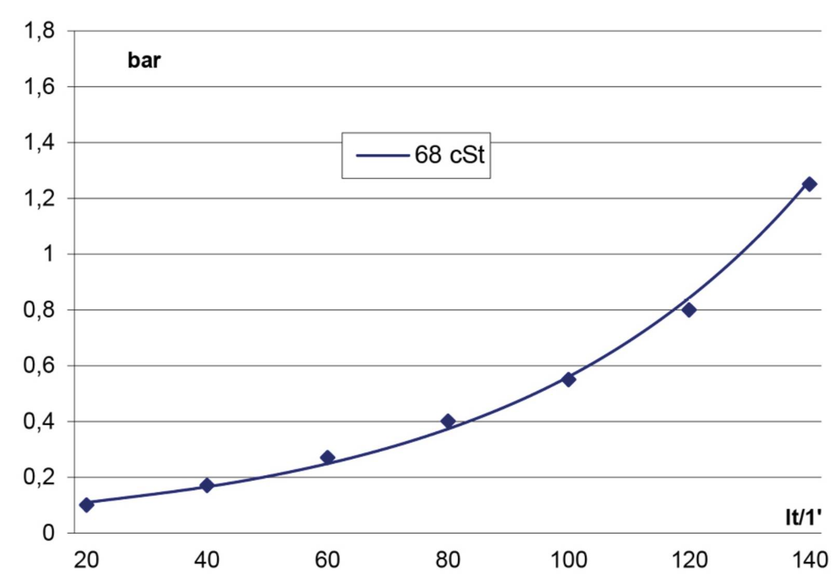

The overall dimensions and the technical characteristics are to be considered indicative, dealing with standarf products in constant evolution.

By-Pass GRS/D 130

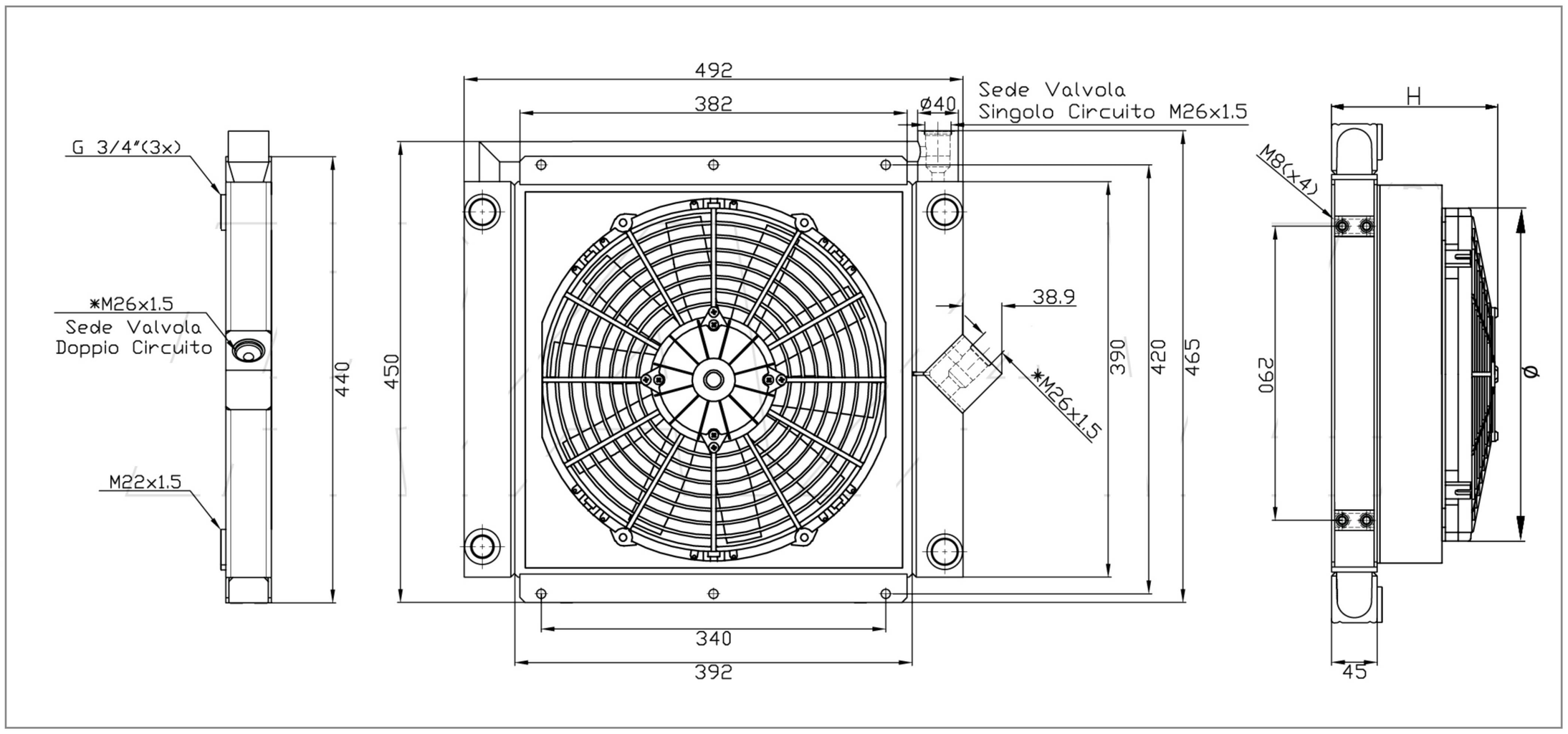

[*] SINGLE CIRCUIT version: the cooler is delivered only with SINGLE CIRCUIT configuration. The DOUBLE CIRCUIT only at specific request of the customer.

Gamma Oil Coolers

Product Code		Type of Setting	Overall H	Fan diameter	Fan Power m3/h	M.R. dm3	Power Consumpt.
RU034596B000		UNCOVERED	45	-	-	6,90	-
RU034596B011		12V Suct.	210	305	1839	6,90	16,5 A
RU034596B012		12V Blow.	210	305	1736	6,90	14,9 A
RU034596B021		24V Suct.	210	305	2161	6,90	10,3 A
RU034596B022		24V Blow.	210	305	2050	6,90	9,1 A
RU034596B031	[*]	230V-50/60Hz Suct.	175	300	3745	6,90	1,55 A
RU034596B032	[*]	230V-50/60Hz Blow.	175	300	3745	6,90	1,55 A
RU034596B041		230/400V-50/60Hz 3FN Suct.	175	300	3350	6,90	0,48 A
RU034596B042		230/400V-50/60Hz 3FN Blow.	175	300	3350	6,90	0,48 A
RU034596B051		Pred. Hydraulic. Suct. (Supp. G2)	225	300	3080	6,90	0,41 kW
RU034596B052		Pred. Hydraulic. Blow. (Supp. G2)	225	300	3080	6,90	0,41 kW

[*]

Technical Specification

Minimum Range	Kw 8 : 30 lt
Maximum Range	Kw 22 : 140 lt

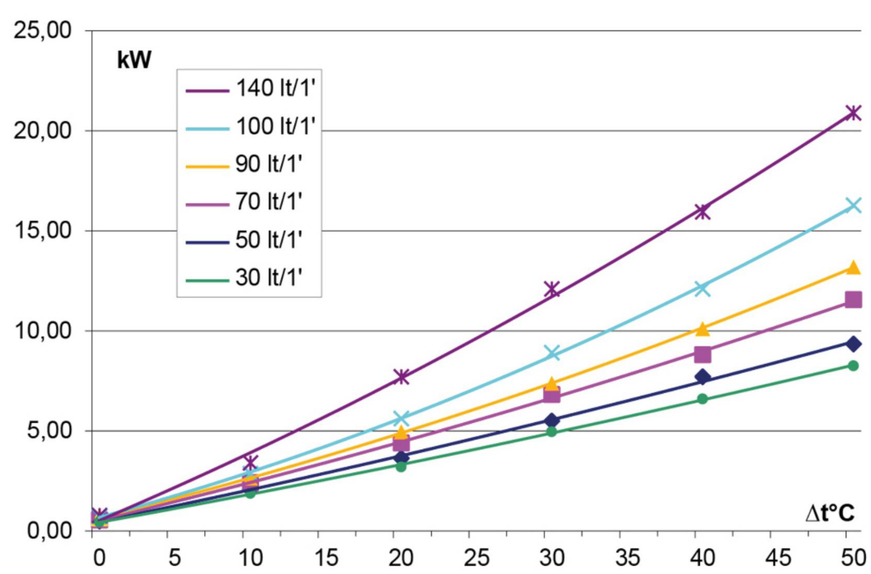

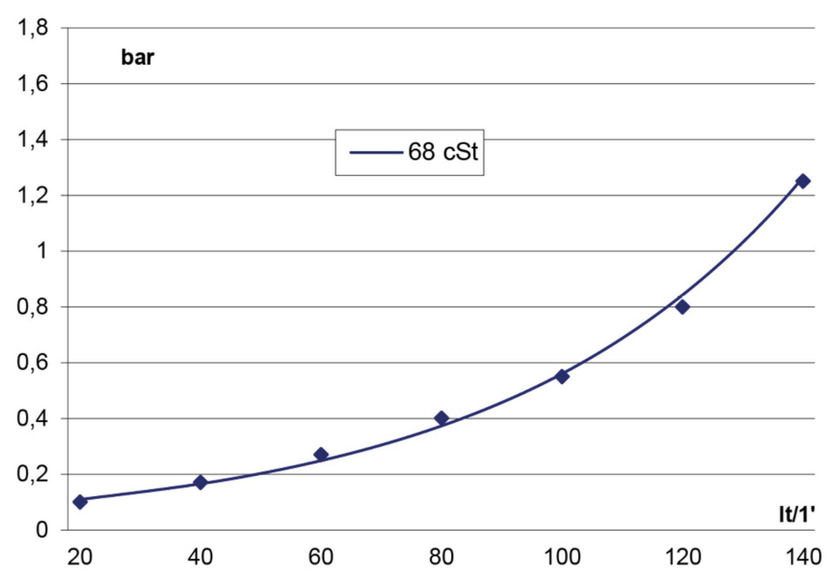

The overall dimensions and the technical characteristics are to be considered indicative, dealing with standarf products in constant evolution.

GRS 150

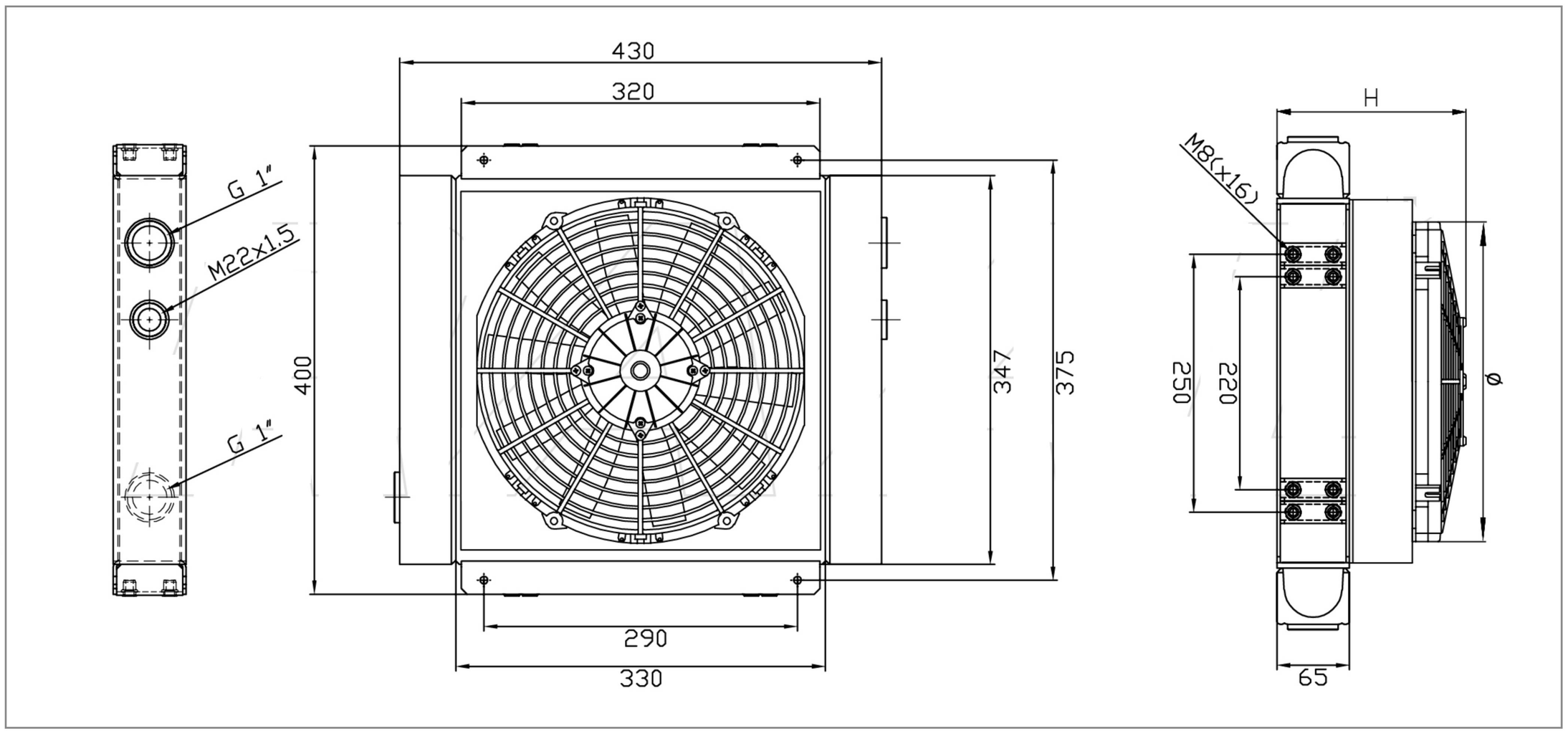

Gamma Oil Coolers

Product Code	Type of Setting	Overall H	Fan diameter	Fan Power m3/h	M.R. dm3	Power Consumpt.
RU0100650000	UNCOVERED	65	-	-	7,44	-
RU0100650011	12V Suct.	230	305	1839	7,44	16,5 A
RU0100650012	12V Blow.	230	305	1736	7,44	14,9 A
RU0100650021	24V Suct.	230	305	2161	7,44	10,3 A
RU0100650022	24V Blow.	230	305	2050	7,44	9,1 A
RU0100650031 [*]	230V-50/60Hz Suct.	195	300	3745	7,44	1,55 A
RU0100650032 [*]	230V-50/60Hz Blow.	195	300	3745	7,44	1,55 A
RU0100650041	230/400V-50/60Hz 3FN Suct.	195	300	3350	7,44	0,48 A
RU0100650042	230/400V-50/60Hz 3FN Blow.	195	300	3350	7,44	0,48 A
RU0100650051	Pred. Hydraulic. Suct. (Supp. G2)	245	300	3080	7,44	0,41 kW
RU0100650052	Pred. Hydraulic. Blow. (Supp. G2)	245	300	3080	7,44	0,41 kW

[*] In SINGLE PHASE models (*31/*32), ADJUSTABLE THERMOSTAT 0-90° on request.

Technical Specification

Minimum Range	Kw 12 : 30 lt
Maximum Range	Kw 20 : 140 lt

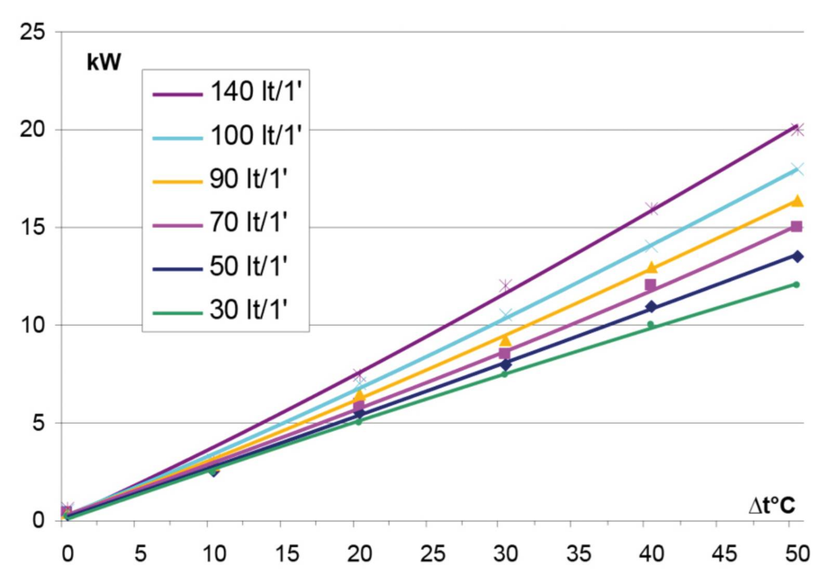

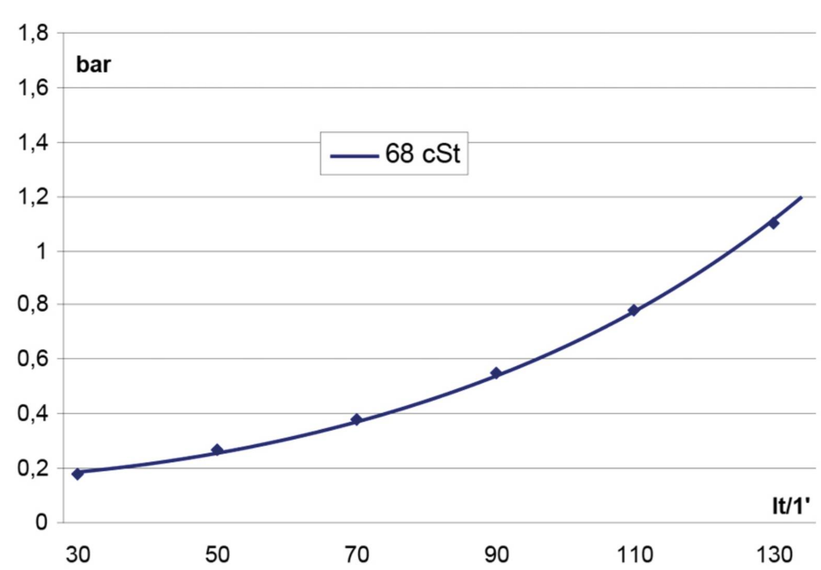

The overall dimensions and the technical characteristics are to be considered indicative, dealing with standarf products in constant evolution.

By-Pass GRS/D 150

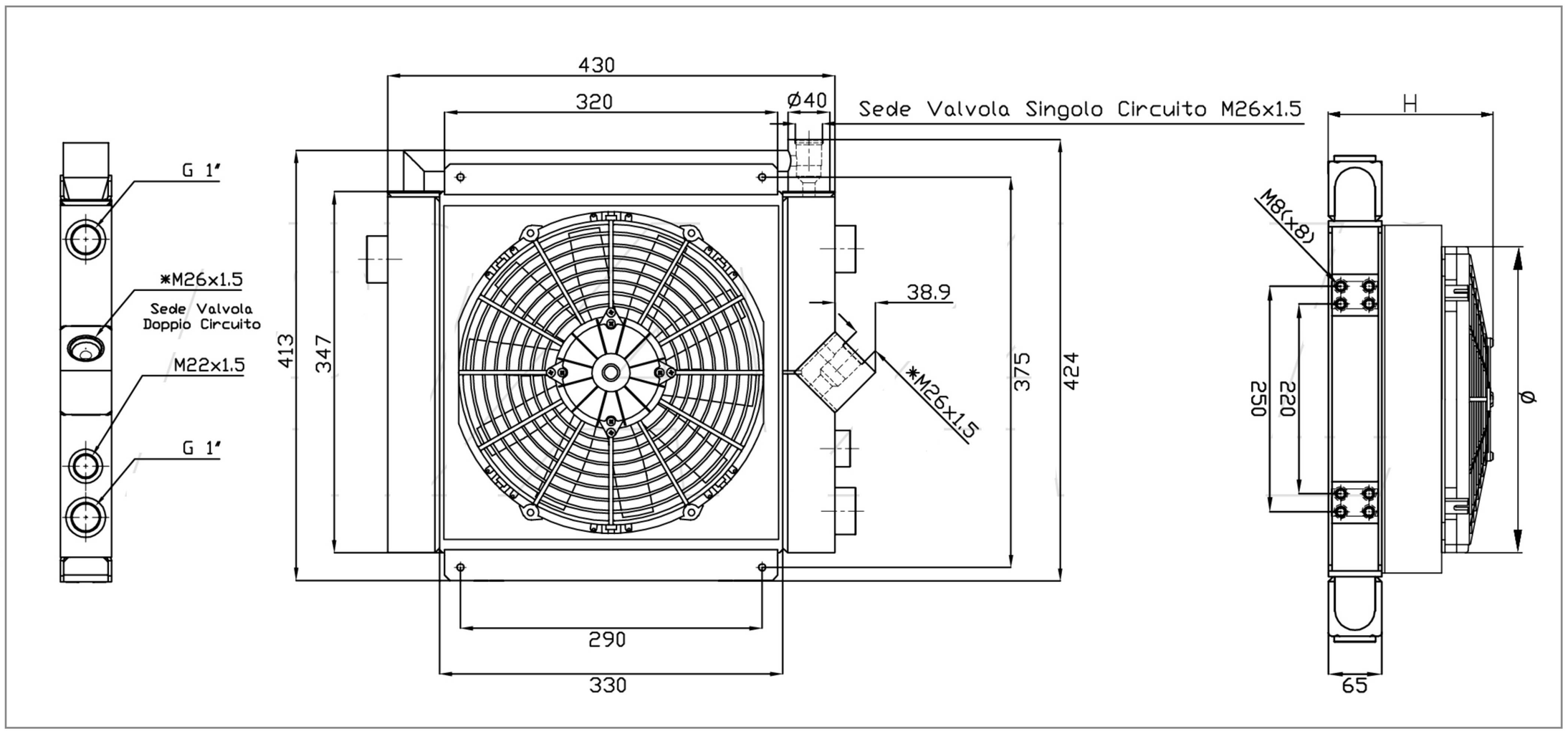

[*] SINGLE CIRCUIT version: the cooler is delivered only with SINGLE CIRCUIT configuration. The DOUBLE CIRCUIT only at specific request of the customer.

Gamma Oil Coolers

Product Code		Type of Setting	Overall H	Fan diameter	Fan Power m3/h	M.R. dm3	Power Consumpt.
RU020113B000		UNCOVERED	65	-	-	7,44	-
RU020113B011		12V Suct.	230	305	1839	7,44	16,5 A
RU020113B012		12V Blow.	230	305	1736	7,44	14,9 A
RU020113B021		24V Suct.	230	305	2161	7,44	10,3 A
RU020113B022		24V Blow.	230	305	2050	7,44	9,1 A
RU020113B031	[*]	230V-50/60Hz Suct.	195	300	3745	7,44	1,55 A
RU020113B032	[*]	230V-50/60Hz Blow.	195	300	3745	7,44	1,55 A
RU020113B041		230/400V-50/60Hz 3FN Suct.	195	300	3350	7,44	0,48 A
RU020113B042		230/400V-50/60Hz 3FN Blow.	195	300	3350	7,44	0,48 A
RU020113B051		Pred. Hydraulic. Suct. (Supp. G2)	245	300	3080	7,44	0,41 kW
RU020113B052		Pred. Hydraulic. Blow. (Supp. G2)	245	300	3080	7,44	0,41 kW

[*]

Technical Specification

Minimum Range	Kw 12 : 30 lt
Maximum Range	Kw 20 : 140 lt

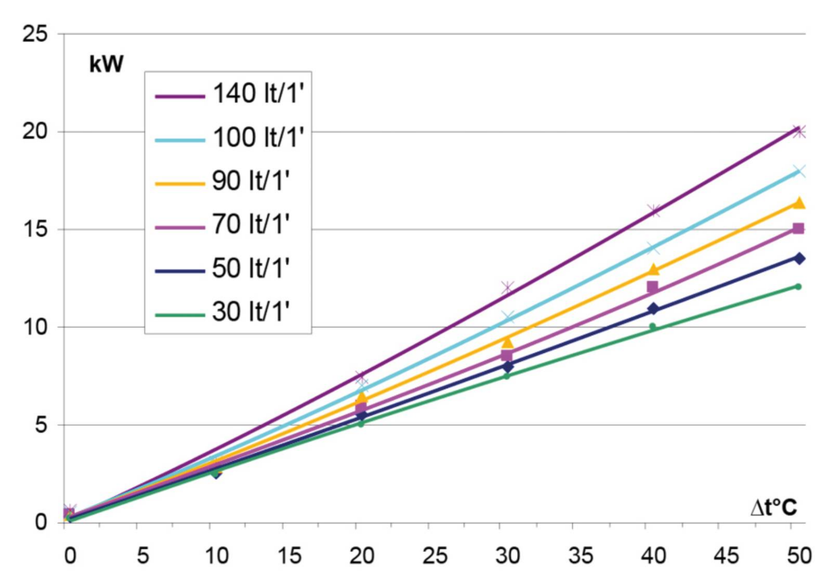

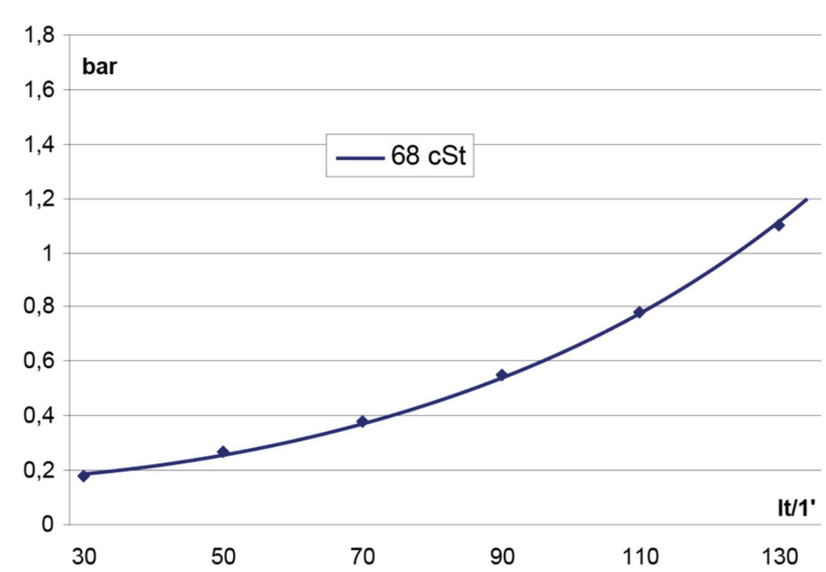

The overall dimensions and the technical characteristics are to be considered indicative, dealing with standarf products in constant evolution.

GRS 200

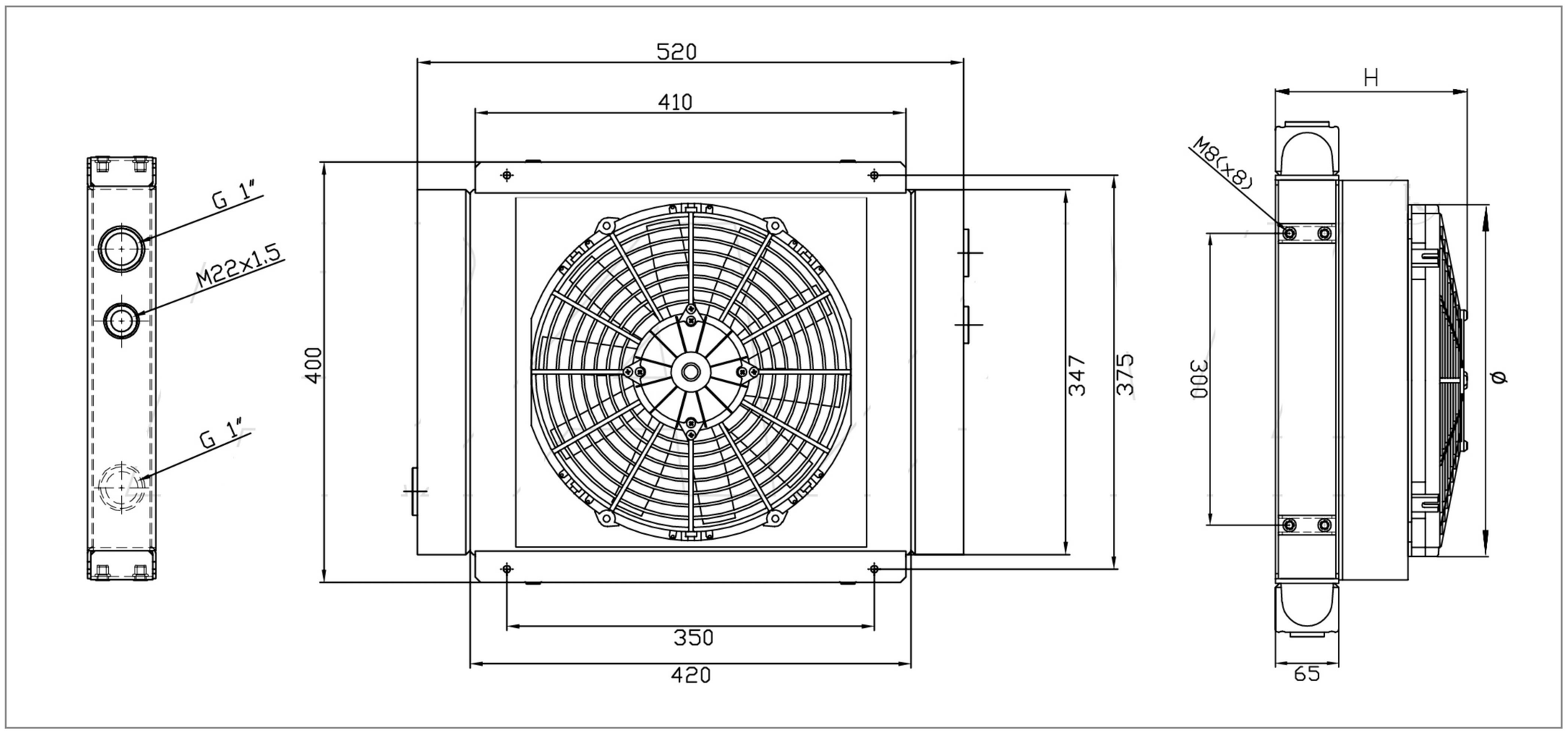

Gamma Oil Coolers

Product Code	Type of Setting	Overall H	Fan diameter	Fan Power m3/h	M.R. dm3	Power Consumpt.
RU0100670000	UNCOVERED	65	-	-	9,47	-
RU0100670011	12V Suct.	220	305	1839	9,47	16,5 A
RU0100670012	12V Blow.	220	305	1736	9,47	14,9 A
RU0100670021	24V Suct.	220	305	2161	9,47	10,3 A
RU0100670022	24V Blow.	220	305	2050	9,47	9,1 A
RU0100670031 [*]	230V-50/60Hz Suct.	180	300	3745	9,47	1,55 A
RU0100670032 [*]	230V-50/60Hz Blow.	180	300	3745	9,47	1,55 A
RU0100670041	230/400V-50/60Hz 3FN Suct.	180	300	3350	9,47	0,48 A
RU0100670042	230/400V-50/60Hz 3FN Blow.	180	300	3350	9,47	0,48 A
RU0100670051	Pred. Hydraulic. Suct. (Supp. G2)	235	300	3080	9,47	0,41 kW
RU0100670052	Pred. Hydraulic. Blow. (Supp. G2)	235	300	3080	9,47	0,41 kW

[*] In SINGLE PHASE models (*31/*32), ADJUSTABLE THERMOSTAT 0-90° on request.

Technical Specification

Minimum Range	Kw 16 : 60 lt
Maximum Range	Kw 27 : 160 lt

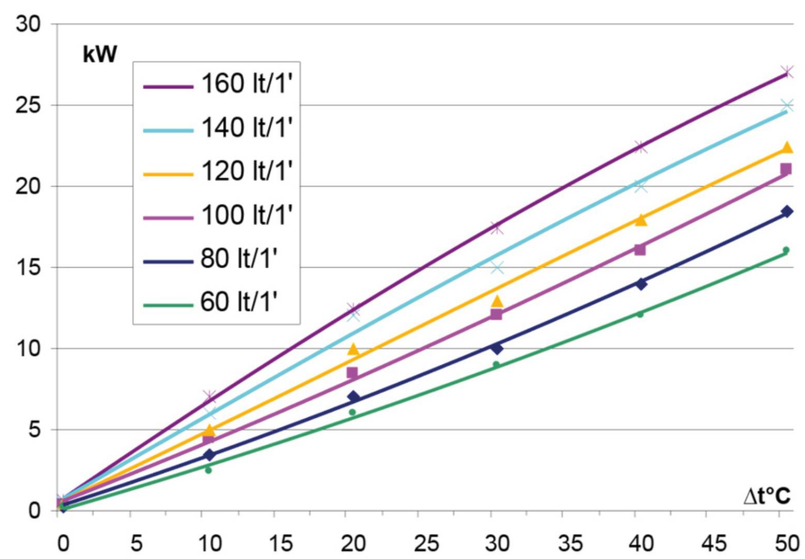

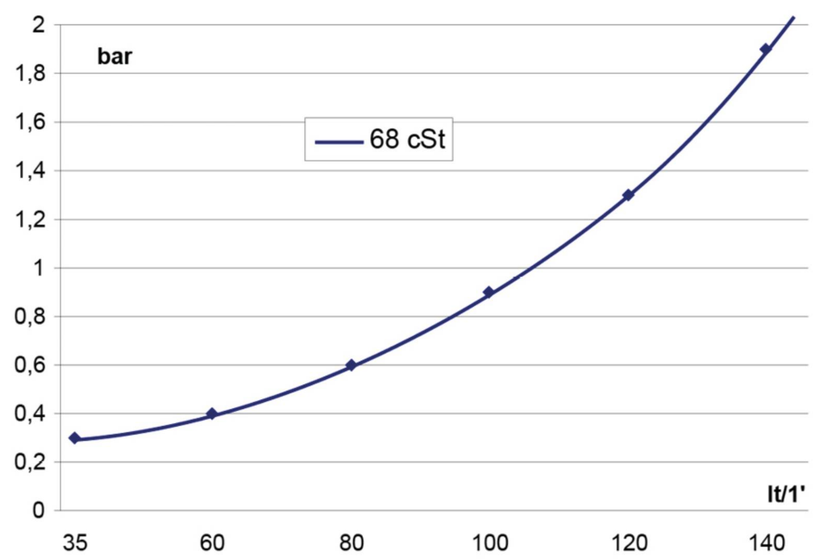

The overall dimensions and the technical characteristics are to be considered indicative, dealing with standarf products in constant evolution.

By-Pass GRS/D 200

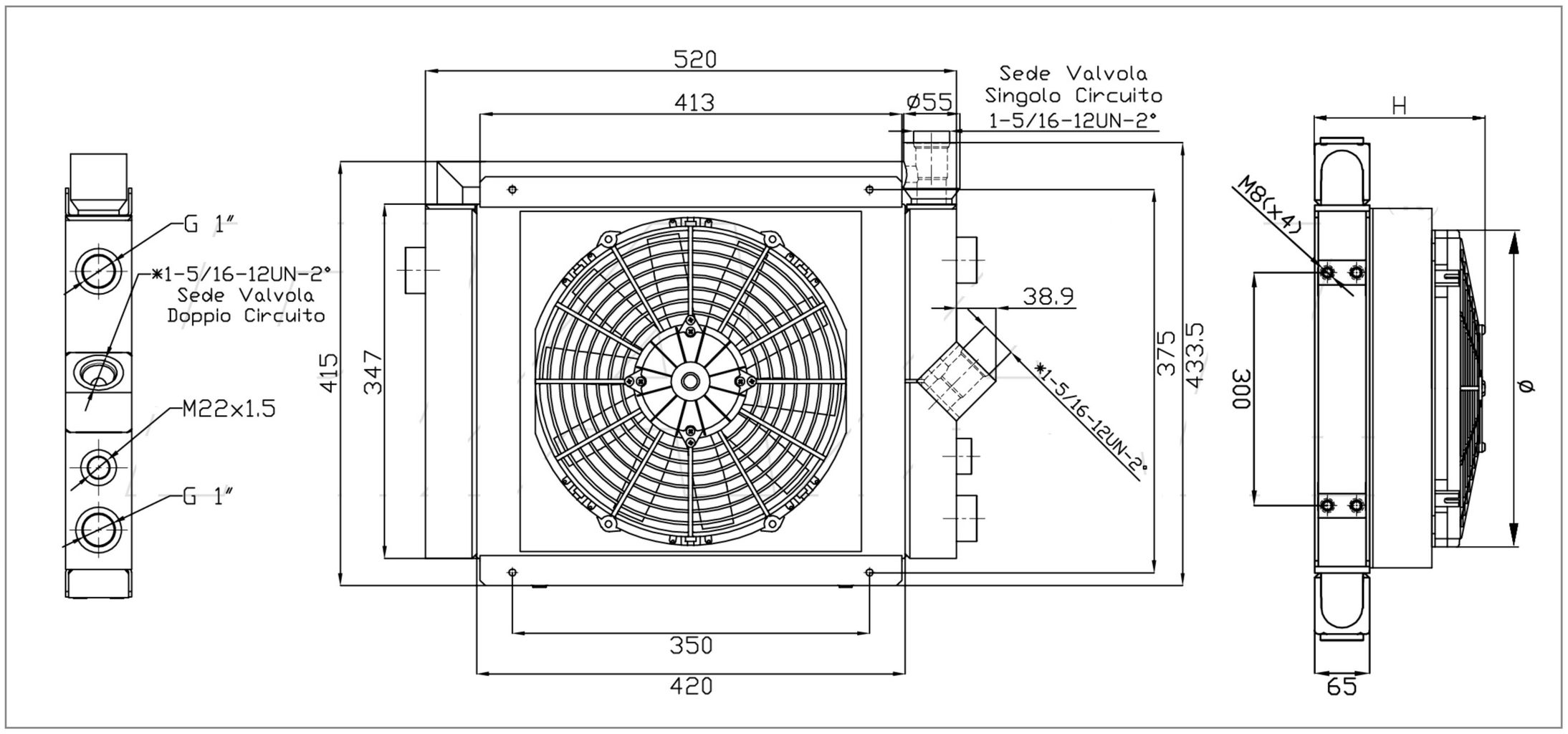

[*] SINGLE CIRCUIT version: the cooler is delivered only with SINGLE CIRCUIT configuration. The DOUBLE CIRCUIT only at specific request of the customer.

Gamma Oil Coolers

Product Code		Type of Setting	Overall H	Fan diameter	Fan Power m3/h	M.R. dm3	Power Consumpt.
RU019458B000		UNCOVERED	65	-	-	9,47	-
RU019458B011		12V Suct.	220	305	1839	9,47	16,5 A
RU019458B012		12V Blow.	220	305	1736	9,47	14,9 A
RU019458B021		24V Suct.	220	305	2161	9,47	10,3 A
RU019458B022		24V Blow.	220	305	2050	9,47	9,1 A
RU019458B031	[*]	230V-50/60Hz Suct.	180	300	3745	9,47	1,55 A
RU019458B032	[*]	230V-50/60Hz Blow.	180	300	3745	9,47	1,55 A
RU019458B041		230/400V-50/60Hz 3FN Suct.	180	300	3350	9,47	0,48 A
RU019458B042		230/400V-50/60Hz 3FN Blow.	180	300	3350	9,47	0,48 A
RU019458B051		Pred. Hydraulic. Suct. (Supp. G2)	235	300	3080	9,47	0,41 kW
RU019458B052		Pred. Hydraulic. Blow. (Supp. G2)	235	300	3080	9,47	0,41 kW

[*] In SINGLE PHASE models (*31/*32), ADJUSTABLE THERMOSTAT 0-90° on request.

Technical Specification

Minimum Range	Kw 16 : 60 lt
Maximum Range	Kw 27 : 160 lt

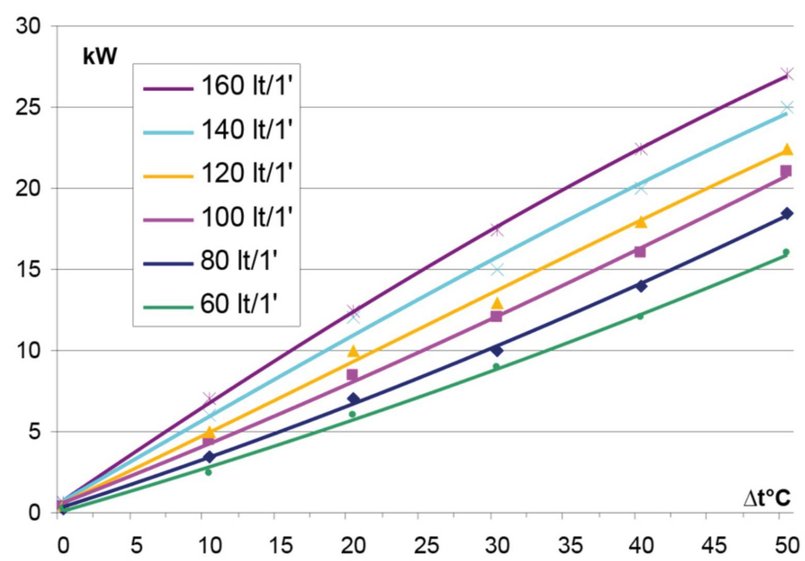

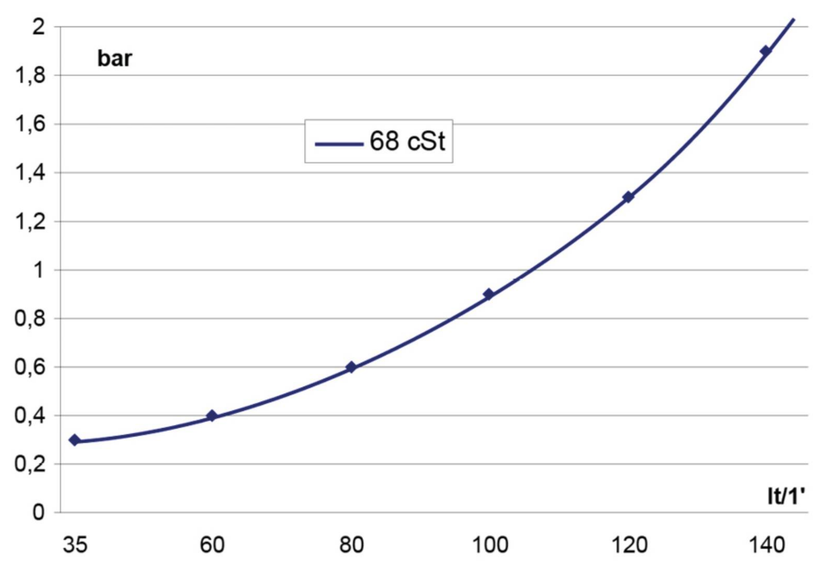

The overall dimensions and the technical characteristics are to be considered indicative, dealing with standarf products in constant evolution.

GRS 300

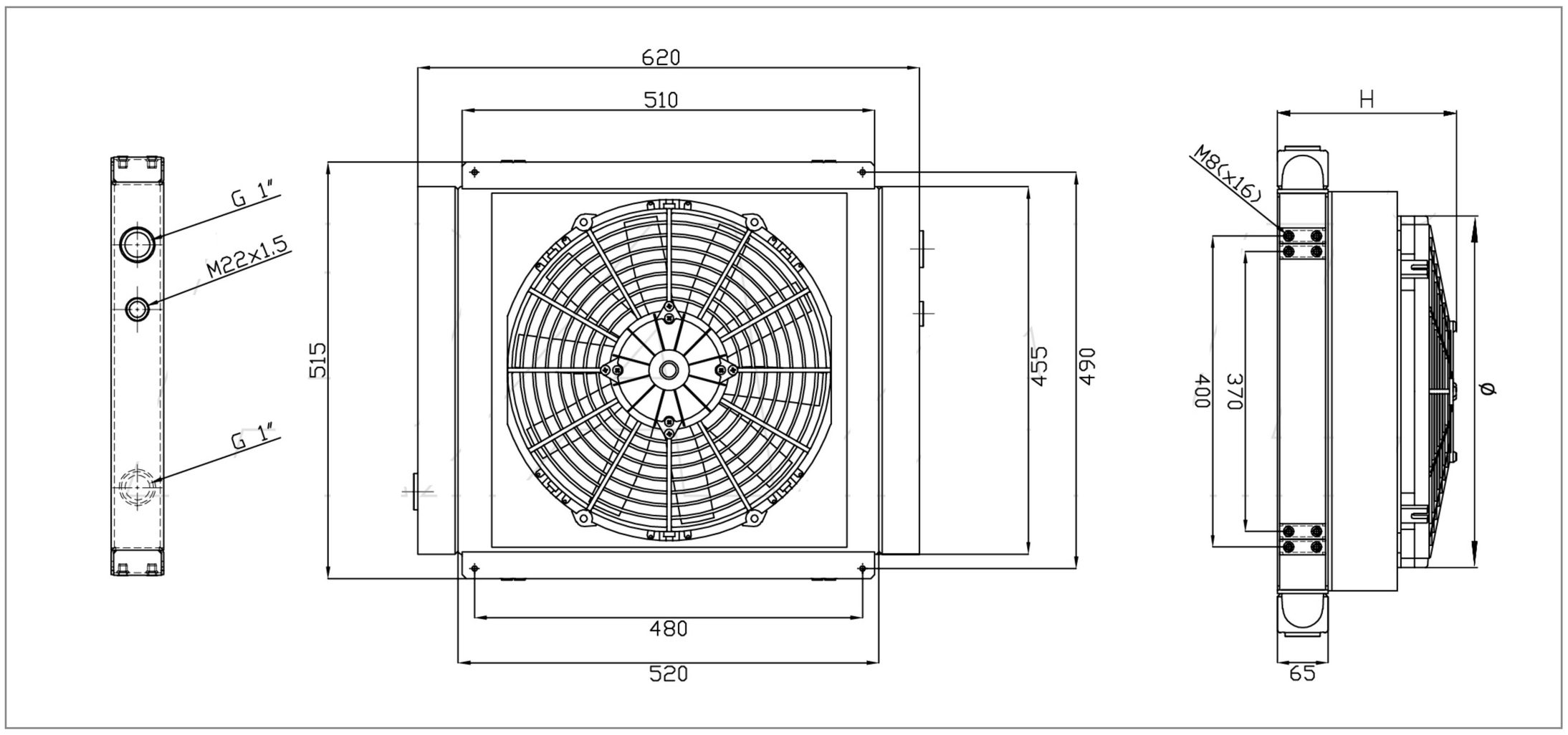

Gamma Oil Coolers

Product Code	Type of Setting	Overall H	Fan diameter	Fan Power m3/h	M.R. dm3	Power Consumpt.
RU0100690000	UNCOVERED	65	-	-	15,38	-
RU0100690011	12V Suct.	230	385	2212	15,38	16,0 A
RU0100690012	12V Blow.	230	385	2412	15,38	16,2 A
RU0100690021	24V Suct.	230	385	2577	15,38	9,3 A
RU0100690022	24V Blow.	230	385	2609	15,38	9,0 A
RU0100690031 [*]	230V-50/60Hz Suct.	230	400	4950	15,38	1,06 A
RU0100690032 [*]	230V-50/60Hz Blow.	230	400	4950	15,38	1,06 A
RU0100690041	230/400V-50/60Hz 3FN Suct.	230	400	4615	15,38	0,39 A
RU0100690042	230/400V-50/60Hz 3FN Blow.	230	400	4615	15,38	0,39 A
RU0100690051	Pred. Hydraulic. Suct. (Supp. G2)	250	400	7050	15,38	1,5 kW
RU0100690052	Pred. Hydraulic. Blow. (Supp. G2)	250	400	7050	15,38	1,5 kW

[*] In SINGLE PHASE models (*31/*32), ADJUSTABLE THERMOSTAT 0-90° on request.

Technical Specification

Minimum Range	Kw 12 : 60 lt
Maximum Range	Kw 32 : 200 lt

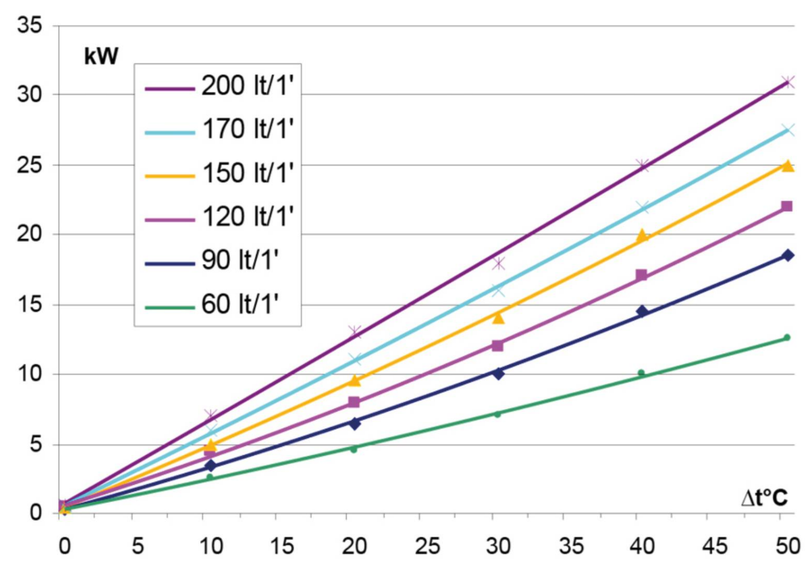

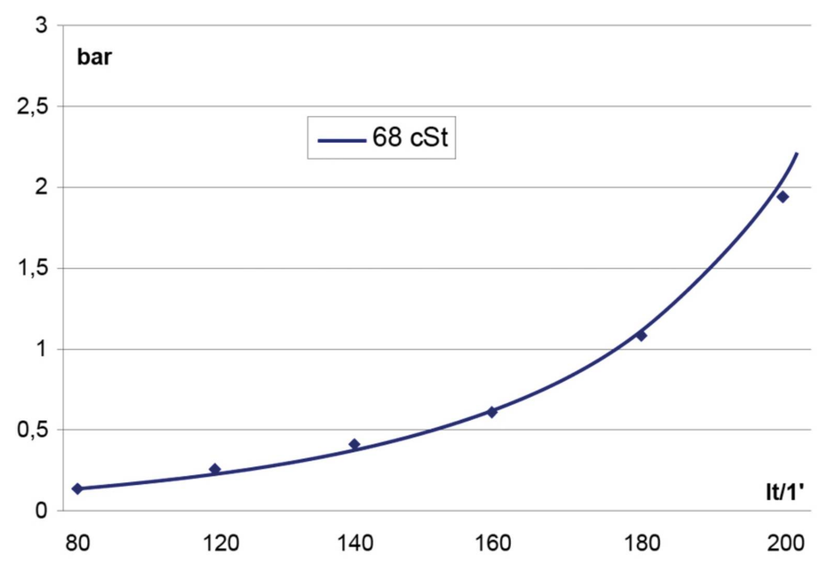

The overall dimensions and the technical characteristics are to be considered indicative, dealing with standarf products in constant evolution.

By-Pass GRS/D 300

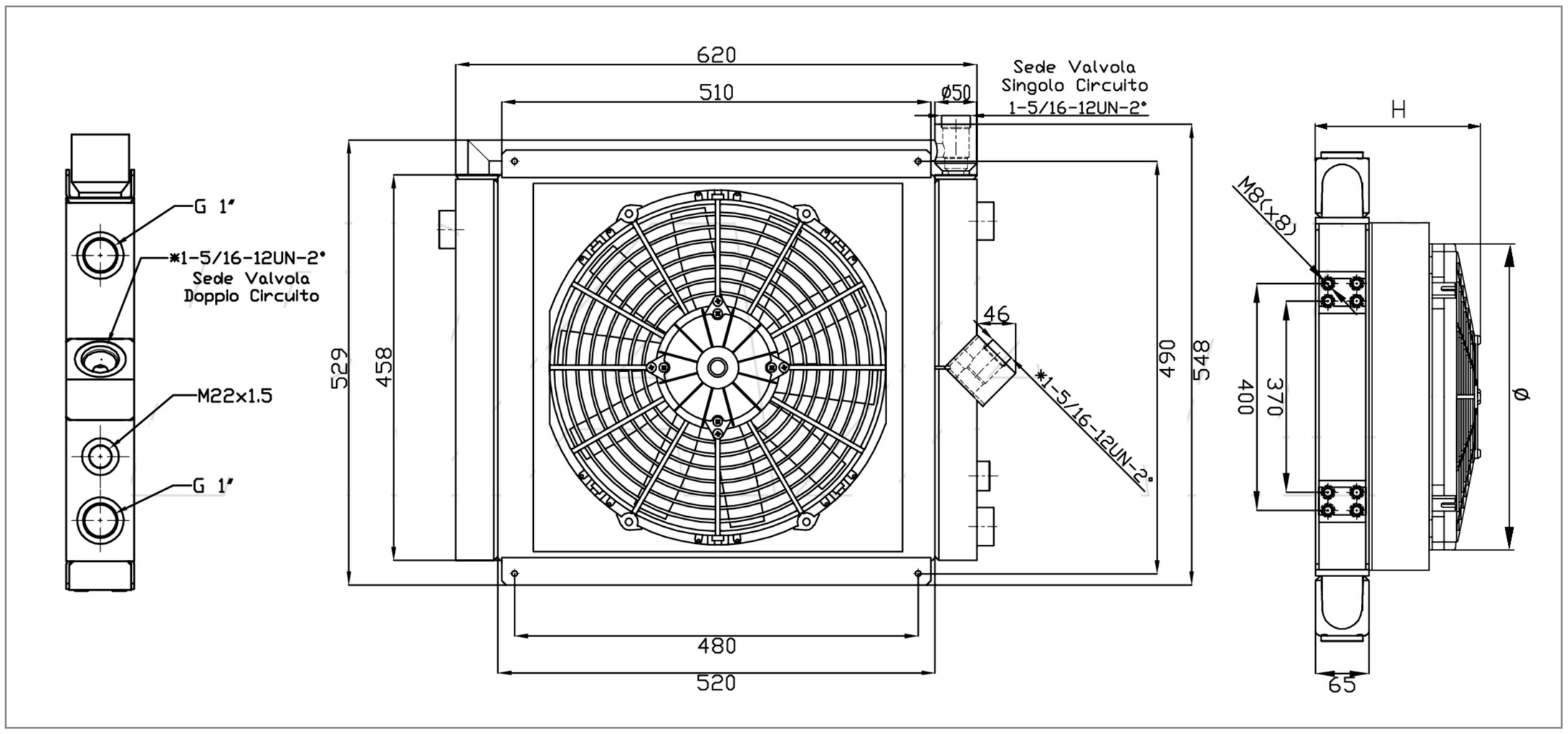

[*] SINGLE CIRCUIT version: the cooler is delivered only with SINGLE CIRCUIT configuration. The DOUBLE CIRCUIT only at specific request of the customer.

Gamma Oil Coolers

Product Code		Type of Setting	Overall H	Fan diameter	Fan Power m3/h	M.R. dm3	Power Consumpt.
RU020114B000		UNCOVERED	65	-	-	15,38	-
RU020114B011		12V Suct.	230	385	2212	15,38	16,0 A
RU020114B012		12V Blow.	230	385	2412	15,38	16,2 A
RU020114B021		24V Suct.	230	385	2577	15,38	9,3 A
RU020114B022		24V Blow.	230	385	2609	15,38	9,0 A
RU020114B031	[*]	230V-50/60Hz Suct.	230	400	4950	15,38	1,06 A
RU020114B032	[*]	230V-50/60Hz Blow.	230	400	4950	15,38	1,06 A
RU020114B041		230/400V-50/60Hz 3FN Suct.	230	400	4615	15,38	0,39 A
RU020114B042		230/400V-50/60Hz 3FN Blow.	230	400	4615	15,38	0,39 A
RU020114B051		Pred. Hydraulic. Suct. (Supp. G2)	250	400	7050	15,38	1,5 kW
RU020114B052		Pred. Hydraulic. Blow. (Supp. G2)	250	400	7050	15,38	1,5 kW

[*] In SINGLE PHASE models (*31/*32), ADJUSTABLE THERMOSTAT 0-90° on request.

Technical Specification

Minimum Range	Kw 13 : 60 lt
Maximum Range	Kw 31 : 200 lt

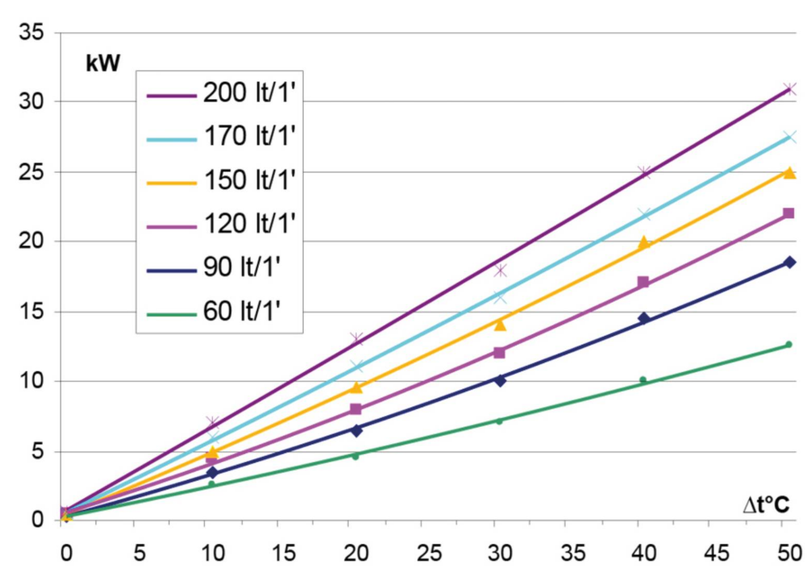

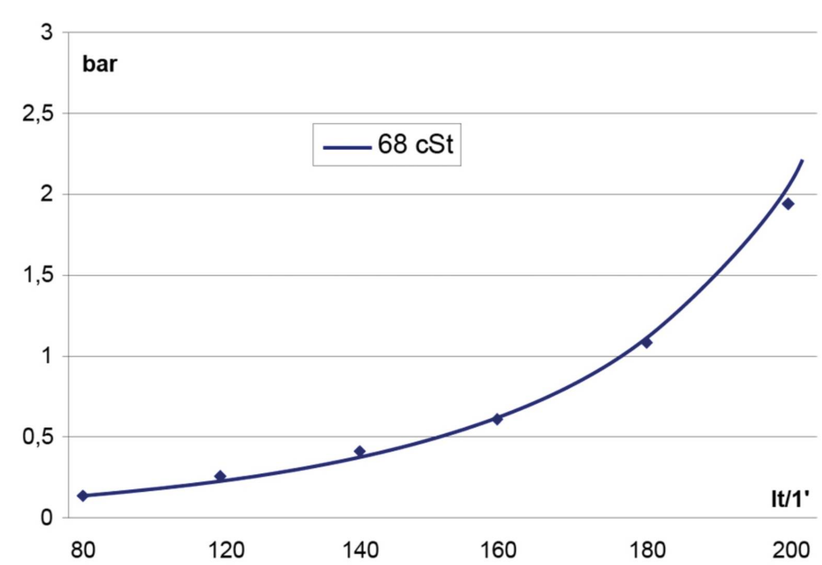

The overall dimensions and the technical characteristics are to be considered indicative, dealing with standarf products in constant evolution.

GRS 500

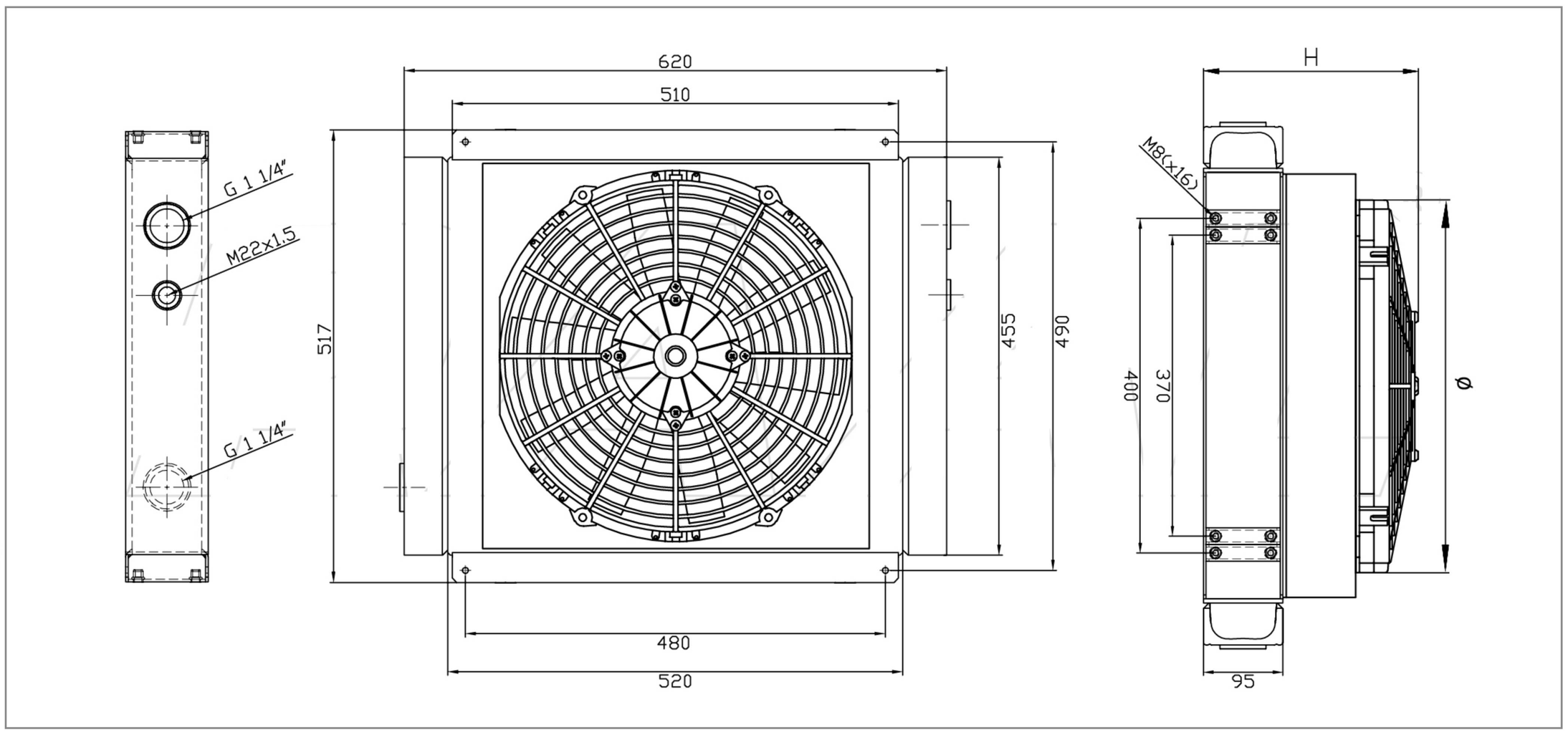

Gamma Oil Coolers

Product Code	Type of Setting	Overall H	Fan diameter	Fan Power m3/h	M.R. dm3	Power Consumpt.
RU0100710000	UNCOVERED	95	-	-	22,48	-
RU0100710011	12V Suct.	260	385	2212	22,48	16,0 A
RU0100710012	12V Blow.	260	385	2412	22,48	16,2 A
RU0100710021	24V Suct.	260	385	2577	22,48	9,3 A
RU0100710022	24V Blow.	260	385	2609	22,48	9,0 A
RU0100710031 [*]	230V-50/60Hz Suct.	260	400	4950	22,48	1,06 A
RU0100710032 [*]	230V-50/60Hz Blow.	260	400	4950	22,48	1,06 A
RU0100710041	230/400V-50/60Hz 3FN Suct.	260	400	4615	22,48	0,39 A
RU0100710042	230/400V-50/60Hz 3FN Blow.	260	400	4615	22,48	0,39 A
RU0100710051	Pred. Hydraulic. Suct. (Supp. G2)	280	400	7050	22,48	1,5 kW
RU0100710052	Pred. Hydraulic. Blow. (Supp. G2)	280	400	7050	22,48	1,5 kW

[*] In SINGLE PHASE models (*31/*32), ADJUSTABLE THERMOSTAT 0-90° on request.

Technical Specification

Minimum Range	Kw 22 : 80 lt
Maximum Range	Kw 45 : 260 lt

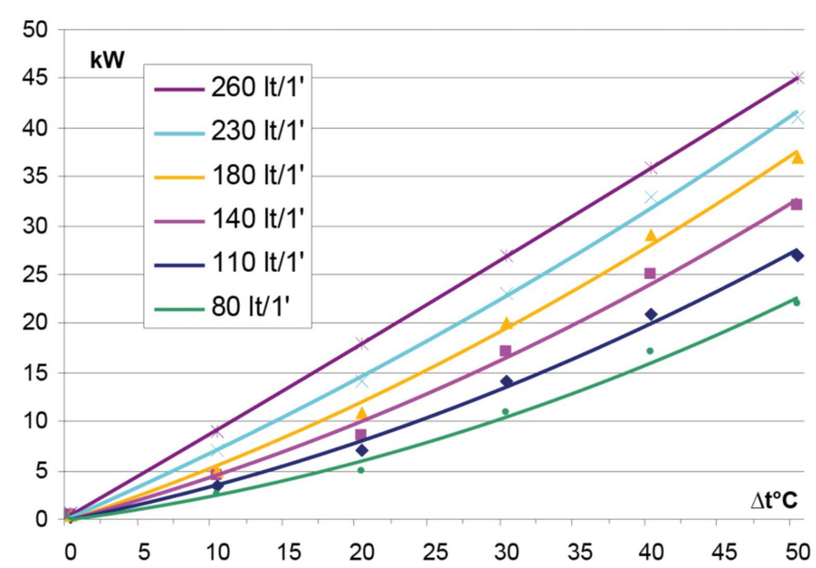

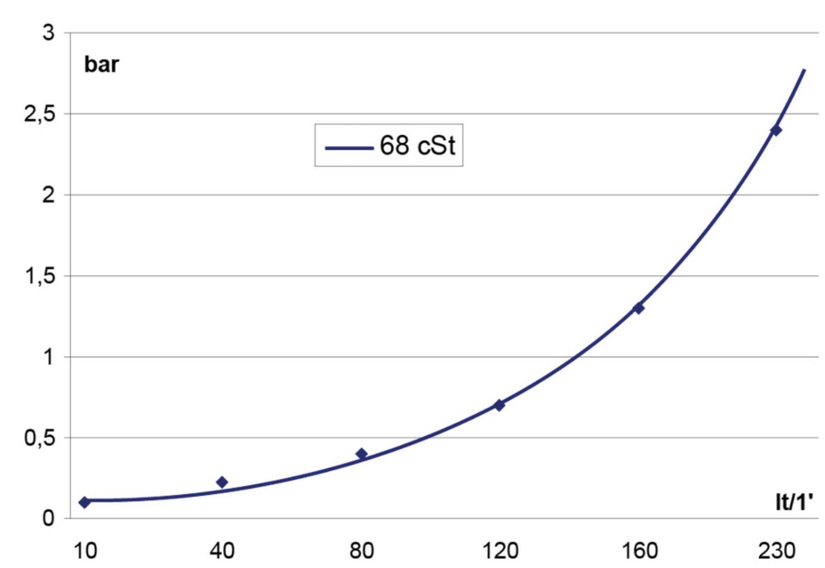

The overall dimensions and the technical characteristics are to be considered indicative, dealing with standarf products in constant evolution.

By-Pass GRS/D 500

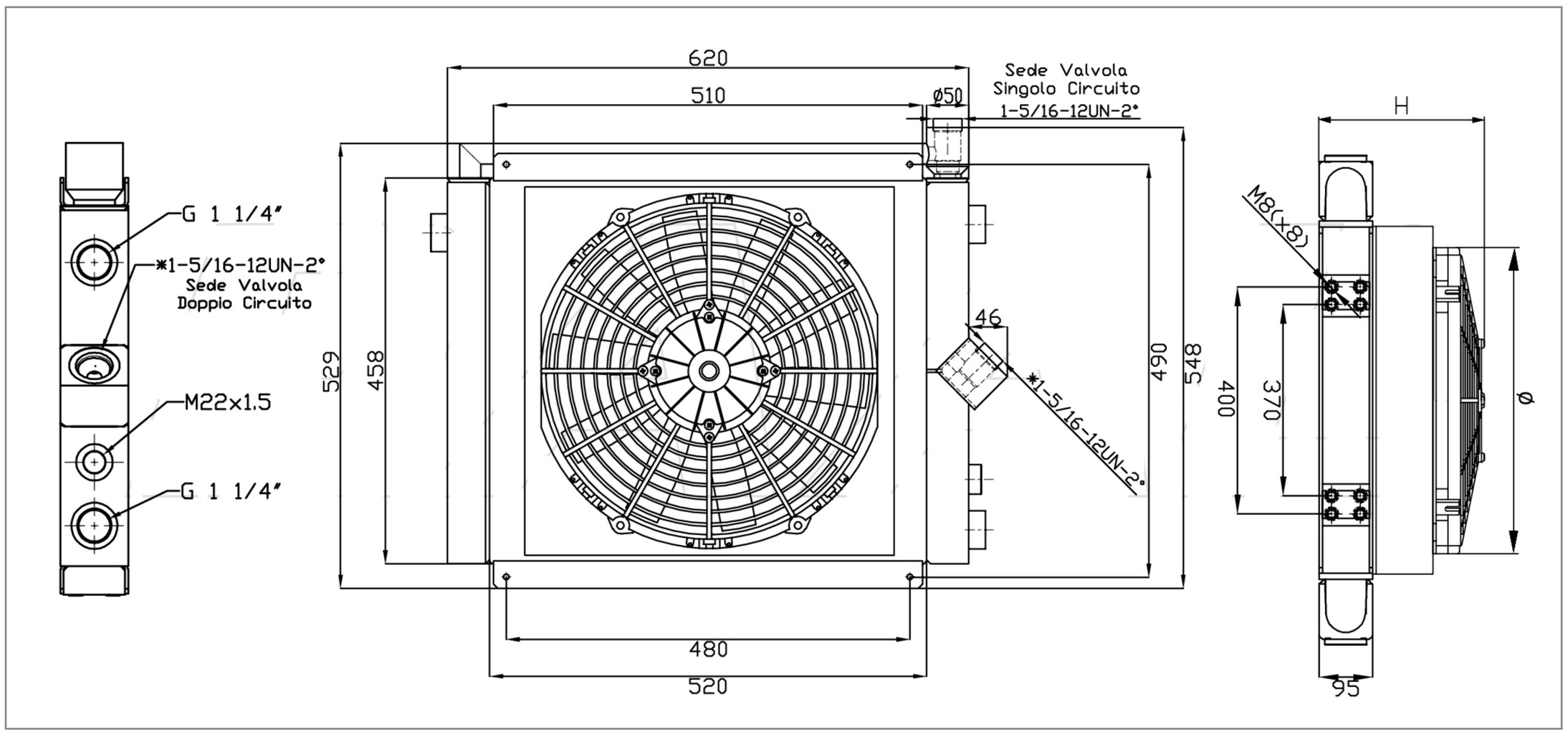

[*] SINGLE CIRCUIT version: the cooler is delivered only with SINGLE CIRCUIT configuration. The DOUBLE CIRCUIT only at specific request of the customer.

Gamma Oil Coolers

Product Code		Type of Setting	Overall H	Fan diameter	Fan Power m3/h	M.R. dm3	Power Consumpt.
RU021919B000		UNCOVERED	95	-	-	22,48	-
RU021919B011		12V Suct.	260	385	2212	22,48	16,0 A
RU021919B012		12V Blow.	260	385	2412	22,48	16,2 A
RU021919B021		24V Suct.	260	385	2577	22,48	9,3 A
RU021919B022		24V Blow.	260	385	2609	22,48	9,0 A
RU021919B031	[*]	230V-50/60Hz Suct.	260	400	4950	22,48	1,06 A
RU021919B032	[*]	230V-50/60Hz Blow.	260	400	4950	22,48	1,06 A
RU021919B041		230/400V-50/60Hz 3FN Suct.	260	400	4615	22,48	0,39 A
RU021919B042		230/400V-50/60Hz 3FN Blow.	260	400	4615	22,48	0,39 A
RU021919B051		Pred. Hydraulic. Suct. (Supp. G2)	280	400	7050	22,48	1,5 kW
RU021919B052		Pred. Hydraulic. Blow. (Supp. G2)	280	400	7050	22,48	1,5 kW

[*] In SINGLE PHASE models (*31/*32), ADJUSTABLE THERMOSTAT 0-90° on request.

Technical Specification

Minimum Range	Kw 22 : 80 lt
Maximum Range	Kw 45 : 260 lt

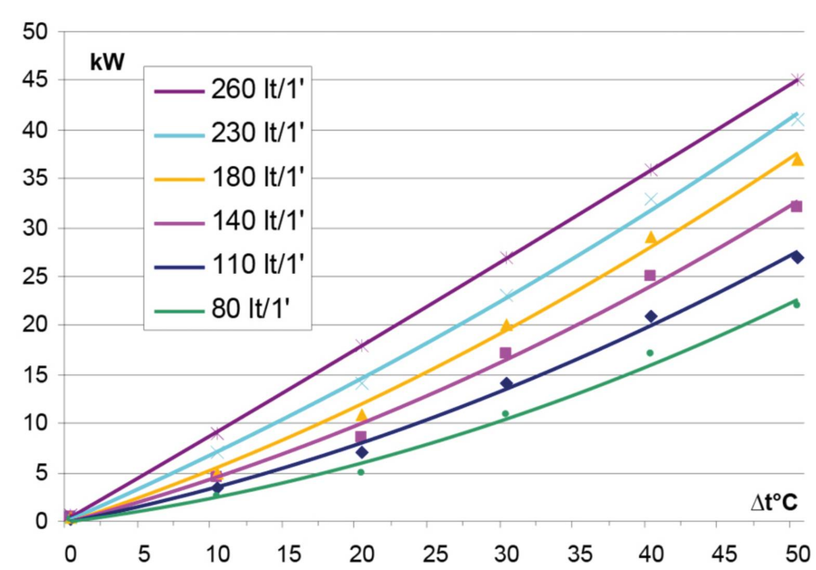

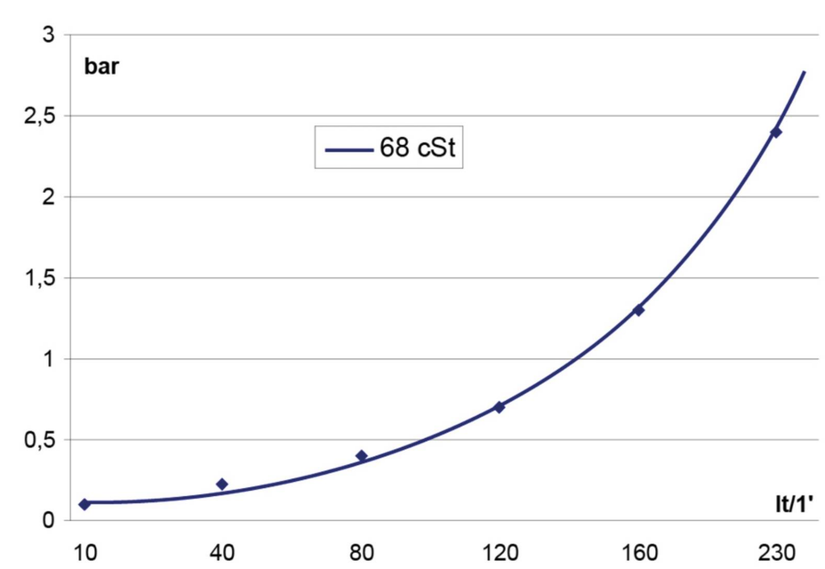

The overall dimensions and the technical characteristics are to be considered indicative, dealing with standarf products in constant evolution.

GRS 700

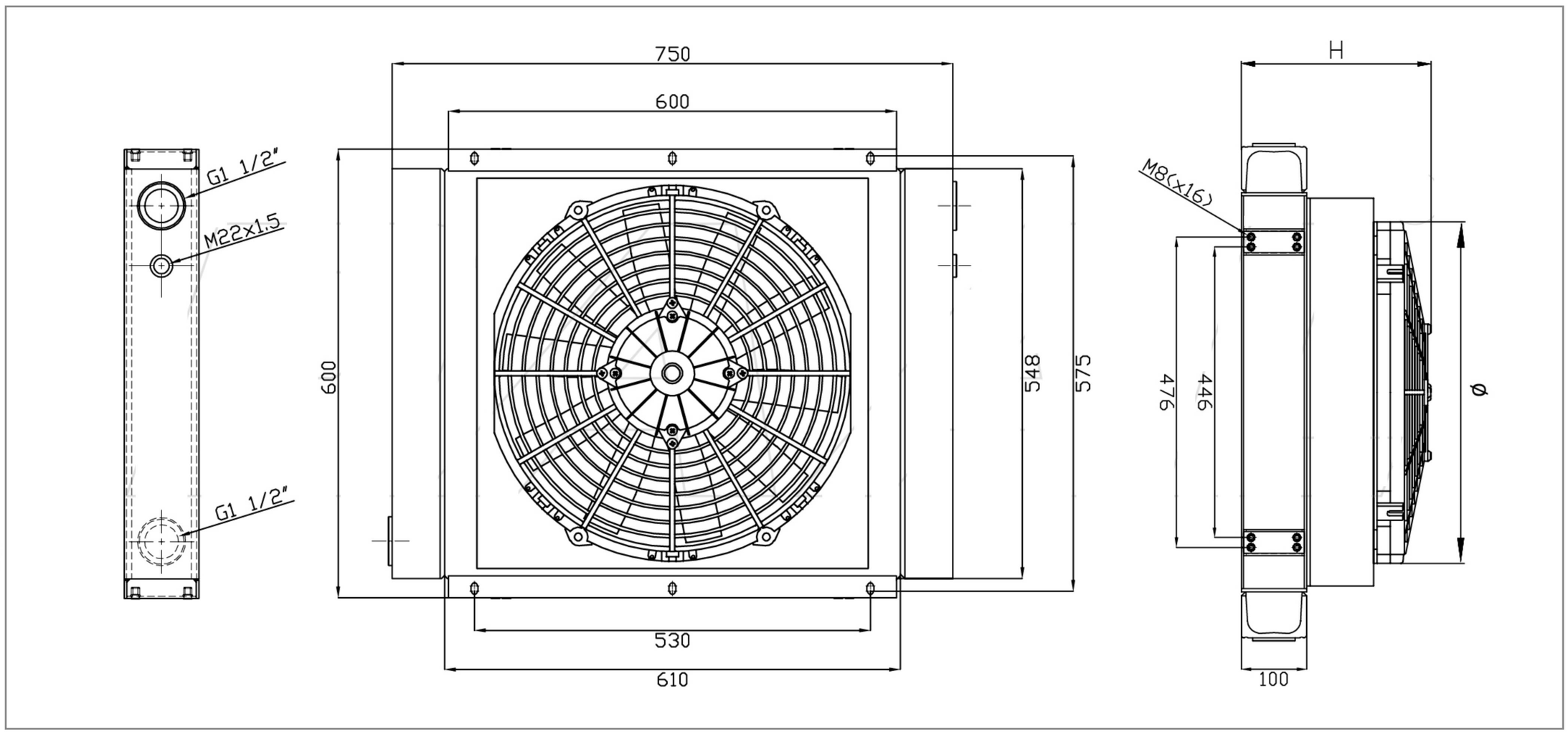

Gamma Oil Coolers

Product Code	Type of Setting	Overall H	Fan diameter	Fan Power m3/h	M.R. dm3	Power Consumpt.
RU0190280000	UNCOVERED	100	-	-	33,43	-
RU0190280211	12V Suct.	265	2 x 305	3678	33,43	33,0 A
RU0190280212	12V Blow.	265	2 x 305	3472	33,43	29,8 A
RU0190280221	24V Suct.	265	2 x 305	4322	33,43	20,6 A
RU0190280222	24V Blow.	265	2 x 305	4100	33,43	18,2 A
RU0190280031/32 [*]	230V-50/60Hz Suct./Blow.	315	500	9850	33,43	3,88 A
RU0190280231/32 [*]	230V-50/60Hz Suct./Blow.	225	2 x 300	7490	33,43	3,1 A
RU0190280041/42	230/400V-50/60Hz 3FN Suct./Blow.	315	500	9195	33,43	1,41 A
RU0190280241/42	230/400V-50/60Hz 3FN Suct./Blow.	225	2 x 300	6700	33,43	0,96 A
RU0190280051	Pred. Hydraulic. Suct. (Supp. G2)	305	500	13300	33,43	4,11 kW
RU0190280052	Pred. Hydraulic. Blow. (Supp. G2)	305	500	13300	33,43	4,11 kW

[*] In SINGLE PHASE models (*31/*32), ADJUSTABLE THERMOSTAT 0-90° on request.

Technical Specification

Minimum Range	Kw 42 : 80 lt
Maximum Range	Kw 62 : 350 lt

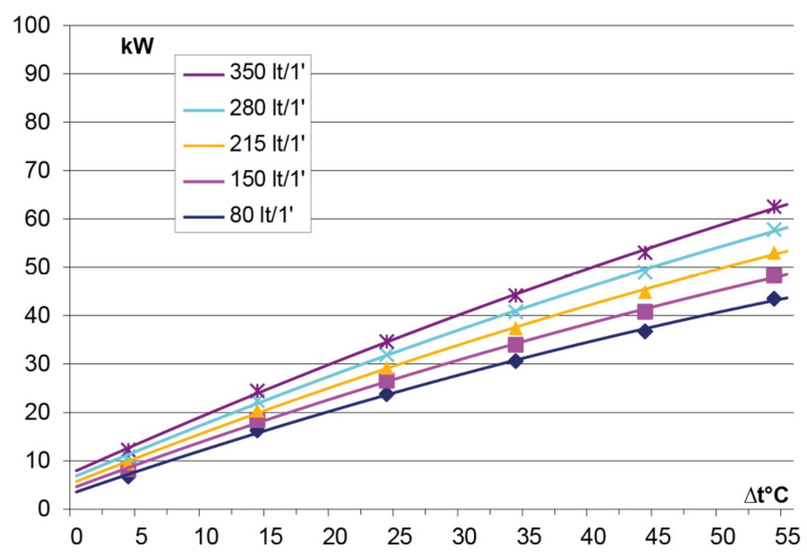

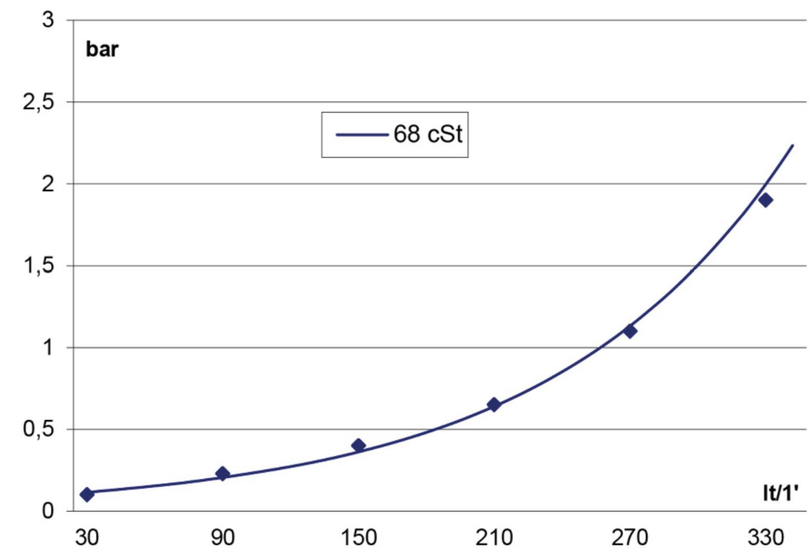

The overall dimensions and the technical characteristics are to be considered indicative, dealing with standarf products in constant evolution.